WIMA Snubber MKP

Snubber MKP Capacitors for Pulse Applications with Double-Sided Metallized Electrodes, Schoopage Contacts and Internal Series Connection

Special Features

- **Pulse duty construction**
- **Self-healing**
- **Particularly reliable contact-configurations: 4-pin versions and screwable plate connections**
- **Internal series connection from 400 VAC**
- **Very low dissipation factor**
- **Negative capacitance change versus temperature**
- **According to RoHS 2011/65/EU**

Typical Applications

For high pulse and high frequency applications requiring extremely reliable contacts e.g.

- **IGBT-applications**

Construction

Dielectric:
Polypropylene (PP) film
Capacitor electrodes:
Double-sided metallized plastic film
Internal construction:

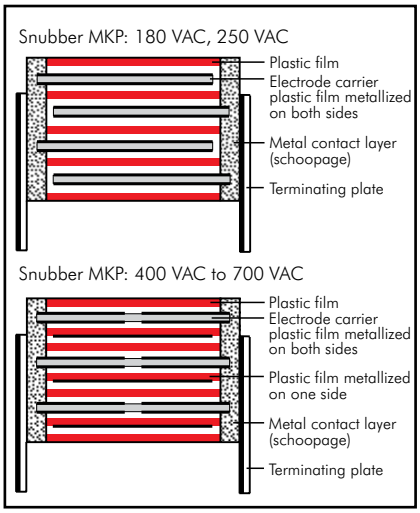

Encapsulation:
Solvent-resistant, flame-retardant plastic case with epoxy resin seal, UL 94 V-0
Terminations:
Tinned wire or plates.
Marking:
Colour: Red. Marking: Black.
Epoxy resin seal: Red

Electrical Data

Capacitance range: 0.047 µF to 25 µF
Rated voltages:
250 VDC, 400 VDC, 630 VDC, 1000 VDC, 1600 VDC, 2000 VDC, 3000 VDC
Capacitance tolerances:
±20%, ±10%, ±5% (other tolerances are available subject to special enquiry)
Operating temperature range:
–55° C to +100° C
Insulation resistance at +20° C:
C ⩽ 0.33 µF: ⩾ 1 x 10^5 MΩ
(mean value: 5 x 10^5 MΩ)
C > 0.33 µF: ⩾ 30 000 sec (MΩ x µF)
(mean value: 100 000 sec)
Measuring voltage: 100 V/1 min.
Test voltage: 2 sec

L	⩽ 2000 VDC	3000 VDC
< 41.5	1.6 U_r	1.2 U_r
41.5	1.4 U_r	1.2 U_r
56	1.2 U_r	1.2 U_r

Climatic test category:
55/100/56 in accordance with IEC
Voltage derating:
A voltage derating factor of 1.35 % per K must be applied from +85° C for DC voltages and from +75° C for AC voltages
Reliability:
Operational life > 300 000 hours
Failure rate < 1 fit (0.5 x U_r and 40° C)
Specific dissipation:

Box size* WxHxL in mm	Specific dissipation in Watts per K above the ambient temperature
19x31x56	0.068
23x34x56	0.079
27x37.5x56	0.092
33x48x56	0.122
37x54x56	0.142

* other box sizes see page 11.

Dissipation factors at + 20° C: tan δ

at f	C ⩽ 0.1 µF	0.1 µF < C ⩽ 1.0 µF	C > 1.0 µF
1 kHz	⩽ 3 x 10^{-4}	⩽ 3 x 10^{-4}	⩽ 3 x 10^{-4}
10 kHz	⩽ 4 x 10^{-4}	⩽ 6 x 10^{-4}	–
100 kHz	⩽ 15 x 10^{-4}	–	–

Maximum pulse rise time:

Capacitance µF	max. pulse rise time V/µsec at T_A < 40° C						
	250 VDC	400 VDC	630 VDC	1000 VDC	1600 VDC	2000 VDC	3000 VDC
0.047 ... 0.22	650	650	1150	1800	1800	1800	1800
0.33 ... 0.68	370	500	900	1150	1150	1150	1150
1.0 ... 2.2	250	250	500	500	650	650	650
2.5 ... 6.8	100	130	190	390	500	–	–
7.0 ... 10	65	90	90	–	–	–	–
15 ... 25	45	65	–	–	–	–	–

for pulses equal to the rated voltage

Mounting Recommendation

Excessive mechanical strain, e.g. pressure or shock onto the capacitor body, is to be avoided during mounting and usage of the capacitors. When fixing the plates the screw torque is to be limited to max. 5 Nm.

For further details and graphs please refer to Technical Information.

Packing

Packing units at the end of the catalogue.

Packing quantities may vary depending on the plate version.

WIMA Snubber MKP

Continuation

General Data

Capacitance	250 VDC/180 VAC* W	H	L	Part number	400 VDC/250 VAC* W	H	L	Part number	630 VDC/400 VAC* W	H	L	Part number
0.1 µF					7	14	18	SNMPG031004D_____	7	16.5	26.5	SNMPJ031005D_____
0.15 „					8	15	18	SNMPG031504F_____	8.5	18.5	26.5	SNMPJ031505F_____
0.22 „	7	14	18	SNMPF032204D_____	7	16.5	26.5	SNMPG032205D_____	10.5	19	26.5	SNMPJ032205G_____
0.33 „	8	15	18	SNMPF033304F_____	8.5	18.5	26.5	SNMPG033305F_____	11	21	26.5	SNMPJ033305I_____
0.47 „	7	16.5	26.5	SNMPF034705D_____	10.5	19	26.5	SNMPG034705G_____	11	21	31.5	SNMPJ034706B_____
0.68 „	8.5	18.5	26.5	SNMPF036805F_____	11	21	31.5	SNMPG036806B_____	15	26	31.5	SNMPJ036806F_____
									13	24	41.5	SNMPJ036807C_____
1.0 µF	11	21	26.5	SNMPF041005I_____	13	24	31.5	SNMPG041006D_____	17	29	31.5	SNMPJ041006G_____
					13	24	41.5	SNMPG041007C_____	15	26	41.5	SNMPJ041007D_____
1.5 „	13	24	31.5	SNMPF041506D_____	17	29	31.5	SNMPG041506G_____	19	32	41.5	SNMPJ041507F_____
	11	22	41.5	SNMPF041507B_____	15	26	41.5	SNMPG041507D_____				
2.0 „	15	26	31.5	SNMPF042006F_____	17	29	41.5	SNMPG042007E_____	20	39.5	41.5	SNMPJ042007G_____
	13	24	41.5	SNMPF042007C_____								
2.2 „	15	26	31.5	SNMPF042206F_____	17	29	41.5	SNMPG042207E_____	20	39.5	41.5	SNMPJ042207G_____
	13	24	41.5	SNMPF042207C_____								
2.5 „	17	29	31.5	SNMPF042506G_____	19	32	41.5	SNMPG042507F_____	24	45.5	41.5	SNMPJ042507H_____
	15	26	41.5	SNMPF042507D_____								
3.0 „	17	34.5	31.5	SNMPF043006I_____	20	39.5	41.5	SNMPG043007G_____	24	45.5	41.5	SNMPJ043007H_____
	15	26	41.5	SNMPF043007D_____								
3.3 „	17	34.5	31.5	SNMPF043306I_____	20	39.5	41.5	SNMPG043307G_____	24	45.5	41.5	SNMPJ043307H_____
	15	26	41.5	SNMPF043307D_____								
4.0 „	19	32	41.5	SNMPF044007F_____	24	45.5	41.5	SNMPG044007H_____	31	46	41.5	SNMPJ044007I_____
4.7 „	19	32	41.5	SNMPF044707F_____	24	45.5	41.5	SNMPG044707H_____	31	46	41.5	SNMPJ044707I_____
5.0 „	20	39.5	41.5	SNMPF045007G_____	24	45.5	41.5	SNMPG045007H_____	31	46	41.5	SNMPJ045007I_____
6.0 „	20	39.5	41.5	SNMPF046007G_____	31	46	41.5	SNMPG046007I_____	35	50	41.5	SNMPJ046007J_____
									33	48	56	SNMPJ046008J_____
6.8 „									40	55	41.5	SNMPJ046807K_____
7.0 „	24	45.5	41.5	SNMPF047007H_____	31	46	41.5	SNMPG047007I_____	33	48	56	SNMPJ047008J_____
8.0 „	24	45.5	41.5	SNMPF048007H_____	33	48	56	SNMPG048008J_____	37	54	56	SNMPJ048008L_____
10.0 µF	31	46	41.5	SNMPF051007I_____	35	50	41.5	SNMPG051007J_____				
					33	48	56	SNMPG051008J_____				
15.0 „	35	50	41.5	SNMPF051507J_____	40	55	41.5	SNMPG051507K_____				
	33	48	56	SNMPF051508J_____	37	54	56	SNMPG051508L_____				
20.0 „	37	54	56	SNMPF052008L_____								
25.0 „	37	54	56	SNMPF052508L_____								

* AC voltage: f ⩽ 1000 Hz; 1.4 x U_{rms} + UDC ⩽ U_r

Dims in mm.

Ionisation inception level in isolated cases may be lower than admissible rated AC voltage.

Versions and dimensional drawings see page 105.

Part number completion:
Version codes see page 108.
Tolerance: 20 % = M
10 % = K
5 % = J
Packing: bulk = S
Pin length: 6-2 = SD
none = 00 (for plate versions)

Rights reserved to amend design data without prior notification.

Continuation page 100

Continuation

General Data

Capacitance	1000 VDC/600 VAC*				1600 VDC/650 VAC*			
	W	H	L	Part number	W	H	L	Part number
0.068 µF	7	16.5	26.5	SNMPO126805D_____	10.5	19	26.5	SNMPT026805G_____
0.1 µF	8.5	18.5	26.5	SNMPO131005F_____	11	21	26.5	SNMPT031005I_____
0.15 „	11	21	26.5	SNMPO131505I_____	13	24	31.5	SNMPT031506D_____
					11	22	41.5	SNMPT031507B_____
0.22 „	11	21	31.5	SNMPO132206B_____	15	26	31.5	SNMPT032206F_____
					13	24	41.5	SNMPT032207C_____
0.33 „	15	26	31.5	SNMPO133306F_____	17	34.5	31.5	SNMPT033306I_____
	13	24	41.5	SNMPO133307C_____	15	26	41.5	SNMPT033307D_____
0.47 „	17	29	31.5	SNMPO134706G_____	19	32	41.5	SNMPT034707F_____
	15	26	41.5	SNMPO134707D_____				
0.68 „	17	29	41.5	SNMPO136807E_____	20	39.5	41.5	SNMPT036807G_____
1.0 µF	20	39.5	41.5	SNMPO141007G_____	24	45.5	41.5	SNMPT041007H_____
	23	34	56	SNMPO141008E_____				
1.5 „	24	45.5	41.5	SNMPO141507H_____	31	46	41.5	SNMPT041507I_____
	23	34	56	SNMPO141508E_____				
2.0 „	31	46	41.5	SNMPO142007I_____	40	55	41.5	SNMPT042007K_____
	27	37.5	56	SNMPO142008H_____	33	48	56	SNMPT042008J_____
2.2 „	31	46	41.5	SNMPO142207I_____	40	55	41.5	SNMPT042207K_____
	27	37.5	56	SNMPO142208H_____	33	48	56	SNMPT042208J_____
2.5 „	35	50	41.5	SNMPO142507J_____	37	54	56	SNMPT042508L_____
	33	48	56	SNMPO142508J_____				
3.0 „	40	55	41.5	SNMPO143007K_____	37	54	56	SNMPT043008L_____
	33	48	56	SNMPO143008J_____				
3.3 „	40	55	41.5	SNMPO143307K_____				
	33	48	56	SNMPO143308J_____				
4.0 „	37	54	56	SNMPO144008L_____				
4.7 „	37	54	56	SNMPO144708L_____				
5.0 „	37	54	56	SNMPO145008L_____				

* AC voltage: f ⩽ 1000 Hz; 1.4 x U_{rms} + UDC ⩽ U_r

Dims. in mm.

Ionisation inception level in isolated cases may be lower than admissible rated AC voltage.

Versions and dimensional drawings see page 105.

Part number completion:	
Version codes see page 108.	
Tolerance:	20 % = M
	10 % = K
	5 % = J
Packing:	bulk = S
Pin length:	6-2 = SD
	none = 00 (for plate versions)

Rights reserved to amend design data without prior notification.

Continuation page 101

Continuation

General Data

Capacitance	2000 VDC/700 VAC* W	H	L	Part number	3000 VDC/700 VAC* W	H	L	Part number
0.047 µF	10.5	19	26.5	SNMPU024705G_____	11	21	31.5	SNMPW024706B_____
0.068 „	11	21	26.5	SNMPU026805I_____	13	24	31.5	SNMPW026806D_____
					11	22	41.5	SNMPW026807B_____
0.1 µF	13	24	31.5	SNMPU031006D_____	15	26	31.5	SNMPW031006F_____
	11	22	41.5	SNMPU031007B_____	13	24	41.5	SNMPW031007C_____
0.15 „	15	26	31.5	SNMPU031506F_____	15	26	41.5	SNMPW031507D_____
	13	24	41.5	SNMPU031507C_____				
0.22 „	17	34.5	31.5	SNMPU032206I_____	19	32	41.5	SNMPW032207F_____
	15	26	41.5	SNMPU032207D_____				
0.33 „	19	32	41.5	SNMPU033307F_____	24	45.5	41.5	SNMPW033307H_____
					19	31	56	SNMPW033308D_____
0.47 „	20	39.5	41.5	SNMPU034707G_____	31	46	41.5	SNMPW034707I_____
					27	37.5	56	SNMPW034708H_____
0.68 „	24	45.5	41.5	SNMPU036807H_____	35	50	41.5	SNMPW036807J_____
					33	48	56	SNMPW036808J_____
1.0 µF	35	50	41.5	SNMPU041007J_____	40	55	41.5	SNMPW041007K_____
	33	48	56	SNMPU041008J_____	33	48	56	SNMPW041008J_____
1.5 „	40	55	41.5	SNMPU041507K_____	37	54	56	SNMPW041508L_____
	33	48	56	SNMPU041508J_____				
2.0 „	37	54	56	SNMPU042008L_____				

* AC voltage: f ⩽ 1000 Hz; 1.4 x U_{rms} + UDC ⩽ U_r

Dims. in mm.

Ionisation inception level in isolated cases may be lower than admissible rated AC voltage.

Versions and dimensional drawings see page 105.

Part number completion:
Version codes see page 108.
Tolerance: 20 % = M
10 % = K
5 % = J
Packing: bulk = S
Pin length: 6-2 = SD
none = 00 (for plate versions)

Rights reserved to amend design data without prior notification.

Permissible AC voltage in relation to frequency at 10° C internal temperature rise (general guide).

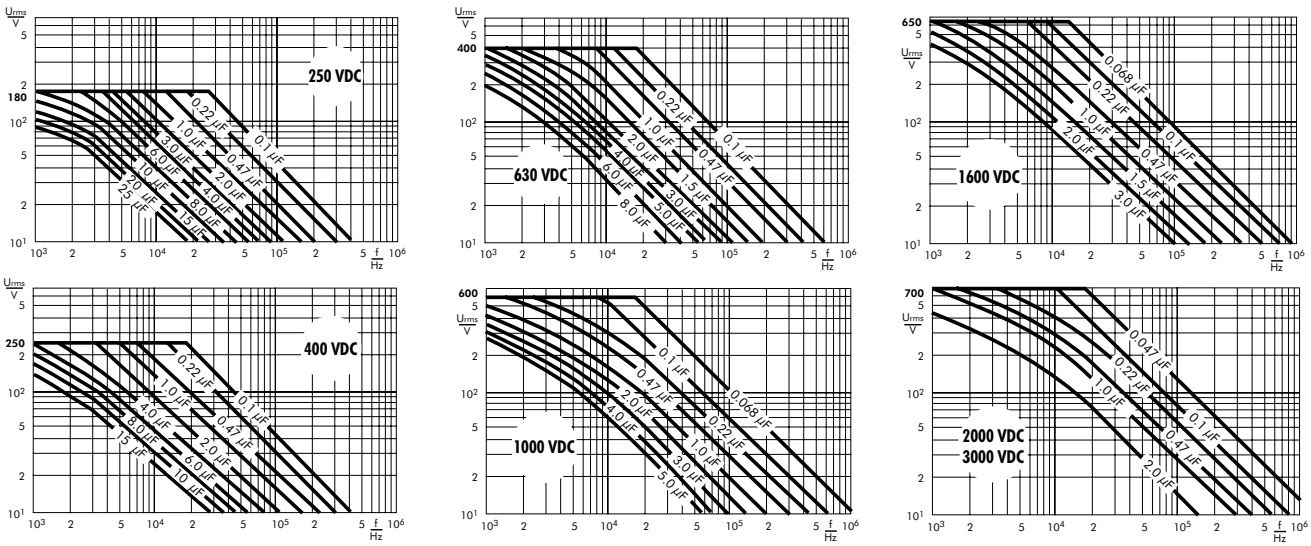

Versions of WIMA Snubber Capacitors

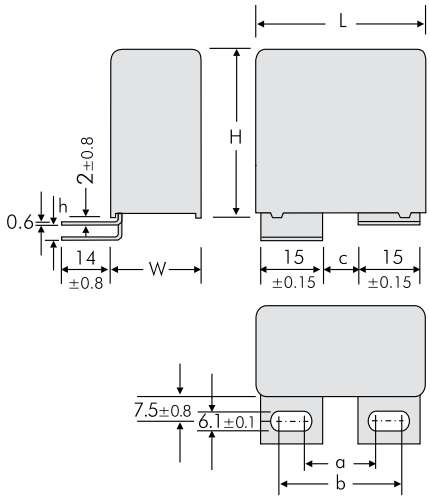

Version	L	a ±0.5	b ±0.5	c ±0.5	h ±0.8
A1	41.5	17.5	27.5	7.5	0
A1.5	41.5	17.5	27.5	7.5	3.5
A1	56	20	30	10	0
A1.1.1	56	28	38	18	0
A1.4	56	20	30	10	3.5
A1.4.1	56	28	38	18	3.5

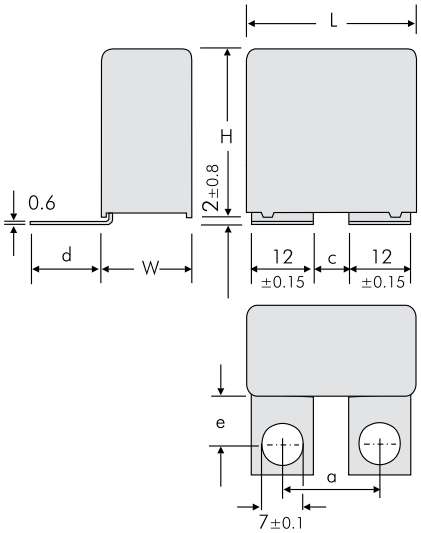

Version	L	a ±0.5	c ±0.5	d ±0.8	e ±0.8
A1.6	41.5	18	6	21.5	16
A1.6.1	41.5	22	10	18.5	13
A1.6	56	29	17	21.5	16

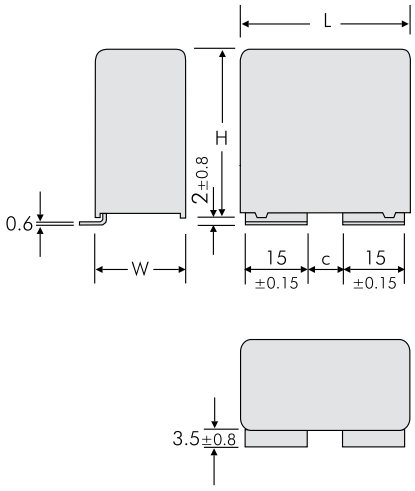

Version	L	c ±0.5
A1.7	41.5	7.5
A1.7	56	10
A1.7.1	56	18

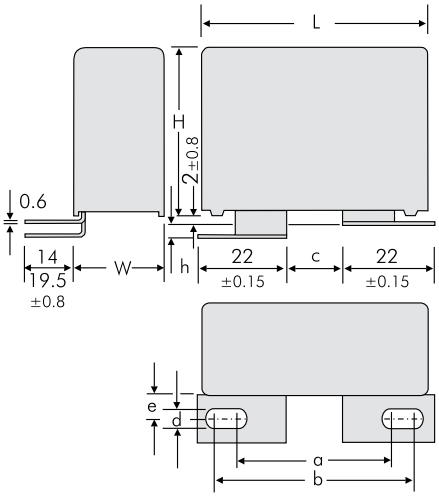

Version	L	a ±0.5	b ±0.5	c ±0.5	d ±0.1	e ±0.8	h ±0.8
A2	41.5	40.5	46.5	14.5	8.4	7.5	0
A2.2	41.5	31	37	5	8.4	7.5	3.5
A2.3	41.5	31	37	5	8.4	13	3.5
A2.4	41.5	33.5	39.5	7.5	8.4	13	3.5
A2.4.1	41.5	33.5	39.5	7.5	8.4	13	0
A2.5	41.5	29.5	39.5	5.5	6.1	7.5	3.5
A2.6	41.5	31.5	41.5	7.5	6.1	13	3.5
A2.6.1	41.5	31.5	41.5	14	6.1	13	3.5
A2.6.2	41.5	31.5	41.5	14	6.1	13	0
A2.8	41.5	40.5	46.5	14.5	8.4	7.5	3.5
A2.1	56	39.5	45.5	13.5	8.4	7.5	0
A2.7	56	39.5	45.5	13.5	8.4	7.5	3.5

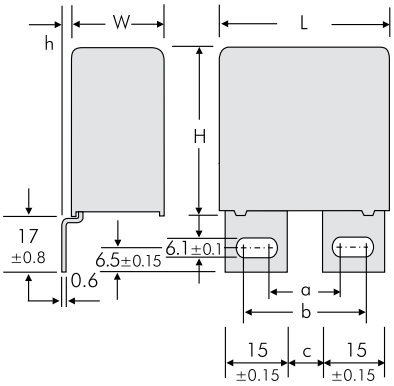

Version	L	a ±0.5	b ±0.5	c ±0.5	h ±0.8
A3	41.5	17.5	27.5	7.5	0
A3.5	41.5	17.5	27.5	7.5	3
A3	56	20	30	10	0
A3.1	56	28	38	18	0
A3.5	56	20	30	10	3
A3.10	56	28	38	18	3

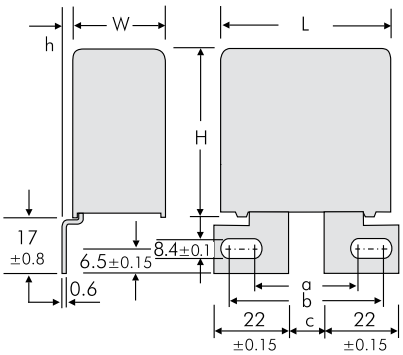

Version	L	a ±0.5	b ±0.5	c ±0.5	h ±0.8
A3.9	41.5	40.5	46.5	14.5	0
A3.11	41.5	40.5	46.5	14.5	3
A3.2	56	40.5	46.5	14.5	0
A3.3	56	40.5	46.5	14.5	3

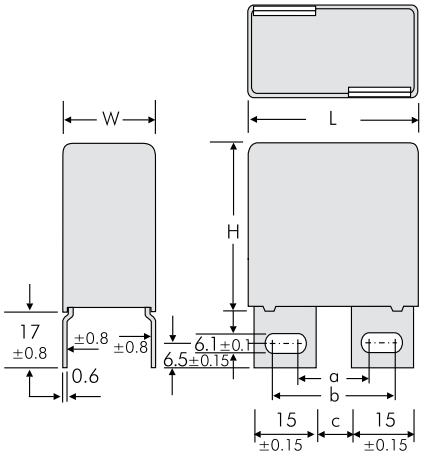

Version	L	a ±0.5	b ±0.5	c ±0.5
A3.6	41.5	17.5	27.5	7.5
A3.7	56	20	30	10

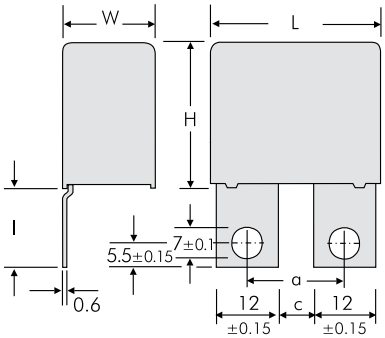

Version	L	a ±0.5	c ±0.5	l ±0.8
A3.8	41.5 W⩾17	18	6	23
A3.8.1	41.5 W⩾17	22	10	17.5

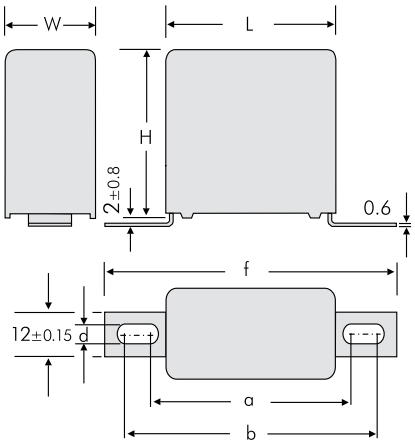

Version	L	a ±0.8	b ±0.8	f ±0.8	d ±0.1
A4.9	31.5 W ⩾15	44	47	57	4.5
A4.10	31.5 W ⩾15	43	59	69	6.1
A4.2	41.5 W ⩾15	54	57	67	4.5
A4	41.5 W ⩾15	53	69	79	6.1
A4.7	56	65	68	78	4.5
A4	56	64	80	90	6.1

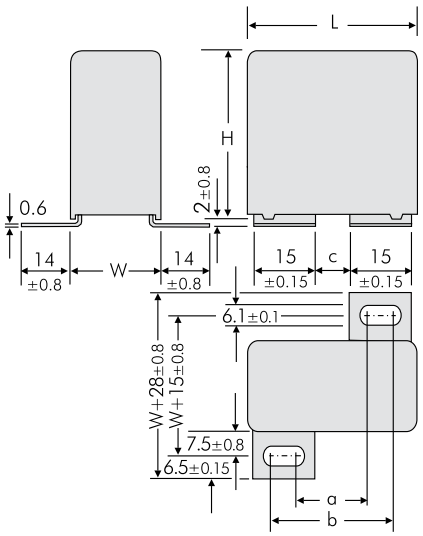

Version	L	a ±0.5	b ±0.5	c ±0.5
A5	41.5	17.5	27.5	7.5
A5	56	20	30	10

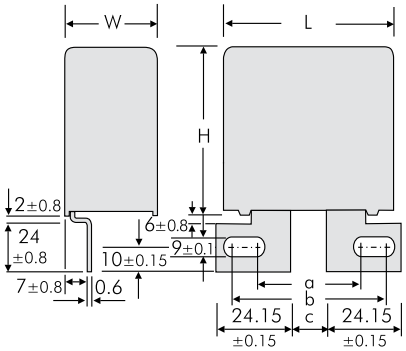

Version	L	a ±0.5	b ±0.5	c ±0.5
A6	56 W ⩾ 23	41.5	45.5	15.5

Versions of WIMA Snubber Capacitors

Version FS 6.3
with slip-on terminals according to DIN 46244

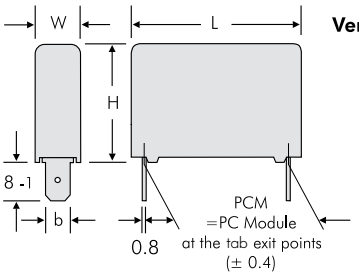

L	W	PCM	b ±0.15
26.5	⩾ 11	23.5	6.3
31.5	⩾ 11	28.5	6.3
41.5	⩾ 11	38.5	6.3
56	⩾ 11	49.5	6.3

Version B*

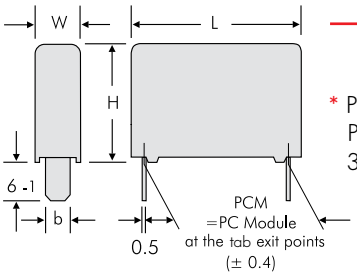

L	PCM	b ±0.15
18	16	5
26.5	23.5	5
31.5	28.5	8
41.5	38.5	8
56	49.5	8

* Processing notification:
Processing should be done within 3 month after manufacturing.

2-pin version

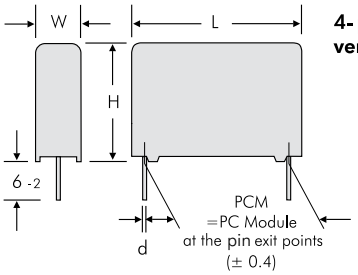

PCM	d
15	0.8
22.5	0.8
27.5	0.8
38.5	1.2
49.5	1.2

4-pin version

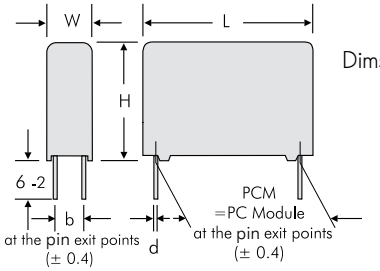

W	H	L	PCM	b	d
10.5	19	26.5	22.5	5	0.8
10.5	20.5	26.5	22.5	5	0.8
11	21	26.5	22.5	5	0.8
11	21	31.5	27.5	5	0.8
13	24	31.5	27.5	7.5	0.8
15	26	31.5	27.5	7.5	0.8
17	29	31.5	27.5	10	0.8
17	34.5	31.5	27.5	10	0.8
20	39.5	31.5	27.5	12.5	0.8
22	43.5	31.5	27.5	12.5	0.8
11	22	41.5	37.5	5	1
13	24	41.5	37.5	7.5	1
15	26	41.5	37.5	7.5	1
17	29	41.5	37.5	10	1
19	32	41.5	37.5	10	1
20	39.5	41.5	37.5	12.5	1
24	45.5	41.5	37.5	12.5	1
31	46	41.5	37.5	20	1
19	31	56	48.5	12.5	1
23	34	56	48.5	15	1
27	37.5	56	48.5	15	1
33	48	56	48.5	20	1
37	54	56	48.5	20	1

Dims. in mm.

Additional special versions can be realized. Please contact us with your specific needs.

Versions of WIMA Snubber Capacitors

Version code		D2	D4	B5*	B8*	1A	1B	1F	1G	1H	1I	1J	1K	1L	2A	2B	2C	2D	2E	2F	2H	2I	2J	2K	2L	2M	3A	3C	3D	3E	3G	3I	3J	3K	3L	3N	3O	3P
W x H x L	Size code	2-pin	4-pin	B5	B8	A1	A1.1.1	A1.4	A1.4.1	A1.5	A1.6	A1.6.1	A1.7	A1.7.1	A2	A2.1	A2.2	A2.3	A2.4	A2.4.1	A2.5	A2.6	A2.6.1	A2.6.2	A2.7	A2.8	A3	A3.1	A3.2	A3.3	A3.5	A3.6	A3.7	A3.8	A3.8.1	A3.9	A3.10	A3.11
7 x 14 x 18	**4D**	■		■																																		
8 x 15 x 18	**4F**	■		■																																		
7 x 16.5 x 26.5	**5D**	■		■																																		
8.5 x 18.5 x 26.5	**5F**	■		■																																		
10.5 x 19 x 26.5	**5G**	■	■	■																																		
10.5 x 20.5 x 26.5	**5H**	■	■	■																																		
11 x 21 x 26.5	**5I**	■	■	■																																		
11 x 21 x 31.5	**6B**	■	■		■																																	
13 x 24 x 31.5	**6D**	■	■		■																																	
15 x 26 x 31.5	**6F**	■	■		■																																	
17 x 29 x 31.5	**6G**	■	■		■																																	
17 x 34.5 x 31.5	**6I**	■	■		■																																	
11 x 22 x 41.5	**7B**	■	■		■	■				■	■	■	■														■				■	■						
13 x 24 x 41.5	**7C**	■	■		■	■				■	■	■	■														■				■	■						
15 x 26 x 41.5	**7D**	■	■		■	■				■	■	■	■														■				■	■						■
17 x 29 x 41.5	**7E**	■	■		■	■				■	■	■	■		■		■	■	■	■	■	■	■		■	■					■	■		■	■	■		■
19 x 32 x 41.5	**7F**	■	■		■	■				■	■	■	■		■		■	■	■	■	■	■	■		■	■					■	■		■	■	■		■
20 x 39.5 x 41.5	**7G**	■	■		■	■				■	■	■	■		■		■	■	■	■	■	■	■		■	■					■	■		■	■	■		■
24 x 45.5 x 41.5	**7H**	■	■		■	■				■	■	■	■		■		■	■	■	■	■	■	■		■	■					■	■		■	■	■		■
31 x 46 x 41.5	**7I**	■	■		■	■				■	■	■	■		■		■	■	■	■	■	■	■		■	■					■	■		■	■	■		■
35 x 50 x 41.5	**7J**	■	■			■				■	■	■			■		■	■	■		■	■	■	■		■	■					■	■		■	■	■		
40 x 55 x 41.5	**7K**	■	■			■				■	■	■			■		■	■	■		■	■	■	■		■	■					■	■		■	■	■		
19 x 31 x 56	**8D**	■	■		■	■	■	■	■		■		■	■		■									■		■	■	■	■	■		■				■	
23 x 34 x 56	**8E**	■	■		■	■	■	■	■		■		■	■		■									■		■	■	■	■	■		■				■	
27 x 37.5 x 56	**8H**	■	■		■	■	■	■	■		■		■	■		■									■		■	■	■	■	■		■				■	
33 x 48 x 56	**8J**	■	■		■	■	■	■	■		■		■	■		■									■		■	■	■	■	■		■				■	
37 x 54 x 56	**8L**	■	■		■	■	■	■	■		■		■	■		■									■		■	■	■	■	■		■				■	

Version code		4A	4C	4J	4L	4M	5A	6A	FS
W x H x L	Size code	A4	A4.2	A4.7	A4.9	A4.10	A5	A6	FS 6.3
11 x 21 x 26.5	**5I**								■
11 x 21 x 31.5	**6B**								■
13 x 24 x 31.5	**6D**								■
15 x 26 x 31.5	**6F**				■	■			■
17 x 29 x 31.5	**6G**				■	■			■
17 x 34.5 x 31.5	**6I**				■	■			■
11 x 22 x 41.5	**7B**								■
13 x 24 x 41.5	**7C**								■
15 x 26 x 41.5	**7D**	■	■						■
17 x 29 x 41.5	**7E**	■	■				■		■
19 x 32 x 41.5	**7F**	■	■				■		■
20 x 39.5 x 41.5	**7G**	■	■				■		■
24 x 45.5 x 41.5	**7H**	■	■				■		■
31 x 46 x 41.5	**7I**	■	■				■		■
19 x 31 x 56	**8D**	■		■			■		■
23 x 34 x 56	**8E**	■		■			■	■	■
27 x 37.5 x 56	**8H**	■		■			■	■	■
33 x 48 x 56	**8J**	■		■			■	■	■
37 x 54 x 56	**8L**	■		■			■	■	■

Possible connecting respective plate versions - depending on box size.

* Processing notification:
Processing should be done within 3 month after manufacturing.

11.14

Recommendation for Processing and Application of Through-Hole Capacitors

Soldering Process

Internal temperature of the capacitor must be kept as follows:

Polyester:	preheating:	$T_{max.} \leqslant 125°$ C
	soldering:	$T_{max.} \leqslant 135°$ C
Polypropylene:	preheating:	$T_{max.} \leqslant 100°$ C
	soldering:	$T_{max.} \leqslant 110°$ C

Single wave soldering
Soldering bath temperature: T < 260° C
Dwell time: t < 5 sec

Double wave soldering
Soldering bath temperature: T < 260° C
Dwell time: Σt < 5 sec

Due to different soldering processes and heat requirements the graphs are to be regarded as a recommendation only.

Wave soldering

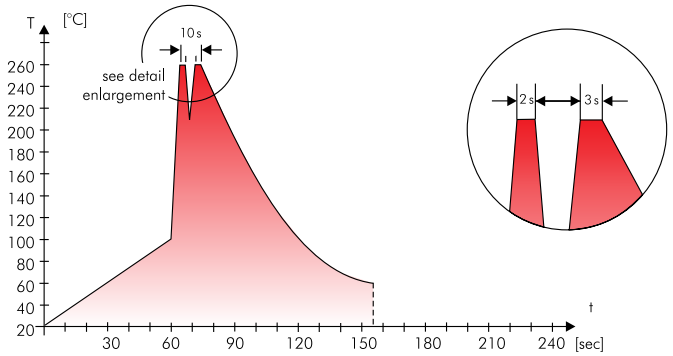

Typical temperature/time graph for double wave soldering

WIMA Quality and Environmental Philosophy

ISO 9001:2008 Certification

ISO 9001:2008 is an international basic standard of quality assurance systems for all branches of industry. The approval according to ISO 9001:2008 of our factories by the VDE inspectorate certifies that organisation, equipment and monitoring of quality assurance in our factories correspond to internationally recognized standards.

WIMA WPCS

The WIMA Process Control System (WPCS) is a quality surveillance and optimization system developed by WIMA. WPCS is a major part of the quality-oriented WIMA production. Points of application of WPCS during production process:

- **incoming material inspection**
- **metallization**
- **film inspection**
- **schoopage**
- **pre-healing**
- **pin attachment**
- **cast resin preparation/ encapsulation**
- **100% final inspection**
- **Testing as per customer requirements**

WIMA Environmental Policy

All WIMA capacitors, irrespective of whether through-hole devices or SMD, are made of environmentally friendly materials. Neither during manufacture nor in the product itself any toxic substances are used, e.g.

- **Lead**
- **PCB**
- **CFC**
- **Hydrocarbon chloride**
- **Chromium 6+**
- **PBB/PBDE**
- **Arsenic**
- **Cadmium**
- **Mercury**
- **etc.**

We merely use pure, recyclable materials for packing our components, such as:

- **carton**
- **cardboard**
- **adhesive tape made of paper**
- **polystyrene**

We almost completely refrain from using packing materials such as:

- **foamed polystyrene (Styropor®)**
- **adhesive tapes made of plastic**
- **metal clips**

RoHS Compliance

According to the RoHS Directive 2011/65/EU certain hazardous substances like e.g. lead, cadmium, mercury must not be used any longer in electronic equipment as of July 1st, 2006. For the sake of the environment WIMA has refraind from using such substances since years already.

WIMA Kondensatoren sind bleifrei konform RoHS 2011/65/EU

WIMA capacitors are lead free in accordance with RoHS 2011/65/EU

Tape for lead-free WIMA capacitors

DIN EN ISO 14001:2004

WIMA's environmental management has been established in accordance with the guidelines of DIN EN ISO 14001:2004 to optimize the production processes with regard to energy and resources.

Typical Dimensions for Taping Configuration

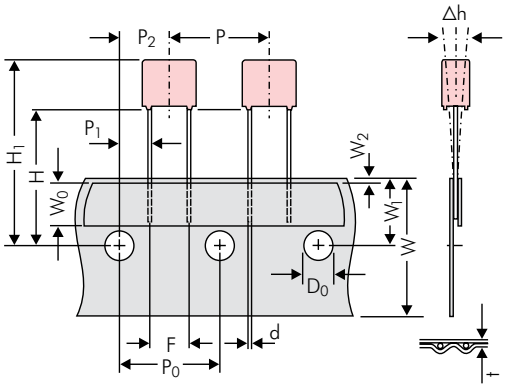

Diagram 1:
PCM 2.5/5/7.5mm

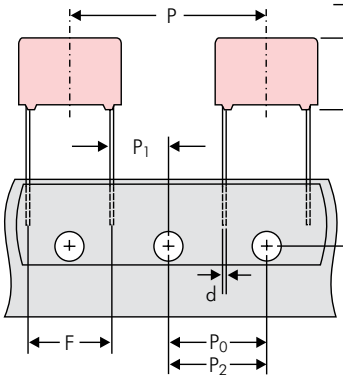

Diagram 2: PCM 10/15 mm

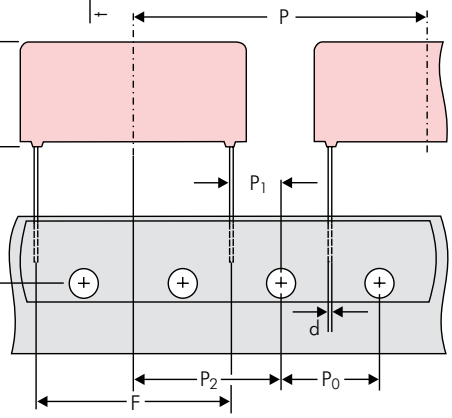

Diagram 3: PCM 22.5 and 27.5*mm
*PCM 27.5 taping possible with two feed holes between components

Designation	Symbol	Dimensions for Radial Taping						
		PCM 2.5 taping	**PCM 5 taping**	**PCM 7.5 taping**	**PCM 10 taping***	**PCM 15 taping***	**PCM 22.5 taping**	**PCM 27.5 taping**
Carrier tape width	W	18.0 ±0.5	18.0 ±0.5	18.0 ±0.5	18.0 ±0.5	18.0 ±0.5	18.0 ±0.5	18.0 ±0.5
Hold-down tape width	W_0	6.0 for hot-sealing adhesive tape	6.0 for hot-sealing adhesive tape	12.0 for hot-sealing adhesive tape	12.0 for hot-sealing adhesive tape	12.0 for hot-sealing adhesive tape	12.0 for hot-sealing adhesive tape	12.0 for hot-sealing adhesive tape
Hole position	W_1	9.0 ±0.5	9.0 ±0.5	9.0 ±0.5	9.0 ±0.5	9.0 ±0.5	9.0 ±0.5	9.0 ±0.5
Hold-down tape position	W_2	0.5 to 3.0 max.	0.5 to 3.0 max.	0.5 to 3.0 max.	0.5 to 3.0 max.	0.5 to 3.0 max.	0.5 to 3.0 max.	0.5 to 3.0 max.
Feed hole diameter	D_0	4.0 ±0.2	4.0 ±0.2	4.0 ±0.2	4.0 ±0.2	4.0 ±0.2	4.0 ±0.2	4.0 ±0.2
Pitch of component	P	12.7 ±1.0	12.7 ±1.0	12.7 ±1.0	25.4 ±1.0	25.4 ±1.0	38.1 ±1.5	*38.1 ±1.5 or 50.8 ±1.5
Feed hole pitch	P_0	12.7 ±0.3 cumulative pitch error max. 1.0 mm/20 pitch	12.7 ±0.3 cumulative pitch error max. 1.0 mm/20 pitch	12.7 ±0.3 cumulative pitch error max. 1.0 mm/20 pitch	12.7 ±0.3 cumulative pitch error max. 1.0 mm/20 pitch	12.7 ±0.3 cumulative pitch error max. 1.0 mm/20 pitch	12.7 ±0.3 cumulative pitch error max. 1.0 mm/20 pitch	12.7 ±0.3 cumulative pitch error max. 1.0 mm/20 pitch
Feed hole centre to pin	P_1	5.1 ±0.5	3.85 ±0.7	2.6 ±0.7	7.7 ±0.7	5.2 ±0.7	7.8 ±0.7	5.3 ±0.7
Hole centre to component centre	P_2	6.35 ±1.3	6.35 ±1.3	6.35 ±1.3	12.7 ±1.3	12.7 ±1.3	19.05 ±1.3	19.05 ±1.3
Feed hole centre to bottom edge of the component	H	16.5 ±0.3 18.5 ±0.5	16.5 ±0.3 18.5 ±0.5	16.5 ±0.5 18.5 ±0.5	16.5 ±0.5 18.5 ±0.5	16.5 ±0.5 18.5 ±0.5	16.5 ±0.5 18.5 ±0.5	16.5 ±0.5 18.5 ±0.5
Feed hole centre to top edge of the component	H_1	$H+H_{component} < H_1$ 32.25 max.	$H+H_{component} < H_1$ 32.25 max.	$H+H_{component} < H_1$ 24.5 to 31.5	$H+H_{component} < H_1$ 25.0 to 31.5	$H+H_{component} < H_1$ 26.0 to 37.0	$H+H_{component} < H_1$ 30.0 to 43.0	$H+H_{component} < H_1$ 35.0 to 45.0
Pin spacing at upper edge of carrier tape	F	2.5 ±0.5	$5.0^{+0.8}_{-0.2}$	7.5 ±0.8	10.0 ±0.8	15 ±0.8	22.5 ±0.8	27.5 ±0.8
Pin diameter	d	0.4 ±0.05	0.5 ±0.05	•0.5 ±0.05 or $0.6^{+0.06}_{-0.05}$	•0.5 ±0.05 or $0.6^{+0.06}_{-0.05}$	$0.8^{+0.08}_{-0.05}$	$0.8^{+0.08}_{-0.05}$	$0.8^{+0.08}_{-0.05}$
Component alignment	Δh	± 2.0 max.	± 2.0 max.	± 3.0 max.	± 3.0 max.	± 3.0 max.	± 3.0 max.	± 3.0 max.
Total tape thickness	t	0.7 ±0.2	0.7 ±0.2	0.7 ±0.2	0.7 ±0.2	0.7 ±0.2	0.7 ±0.2	0.7 ±0.2
Package (see also page 141)		ROLL/AMMO		AMMO				
		REEL ø 360 max. ø 30 ±1 B 52 ±2 / 58 ±2 } depending on comp. dimensions		REEL ø 360 max. ø 30 ±1 B 52 ±2 / 58 ±2 / 66 ±2 or REEL ø 500 max. ø 25 ±1 B 54 ±2 / 60 ±2 / 68 ±2 } depending on PCM and component dimensions				
Unit		see details page 142.						

Dims in mm.

- • Diameter of pins see General Data.
- * PCM 10 and PCM 15 can be crimped to PCM 7.5.
  Position of components according to PCM 7.5 (sketch 1). P_0 = 12.7 or 15.0 is possible

Please clarify customer-specific deviations with the manufacturer.

11.14

Types of Tape Packaging of Capacitors for Automatic Radial Insertion

ROLL Packaging

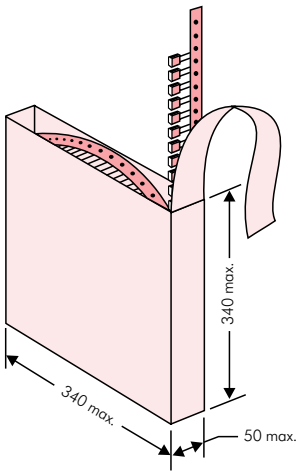

AMMO Packaging

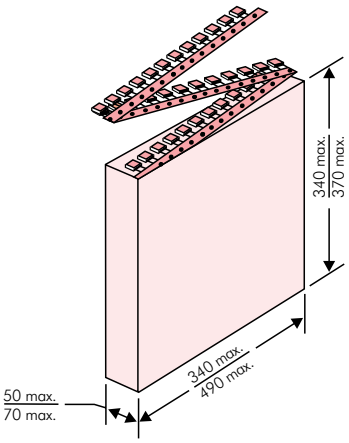

REEL Packaging

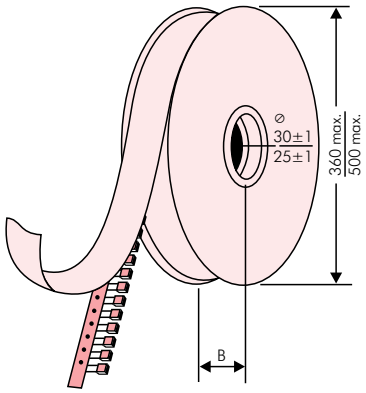

BAR CODE (Labelling)

Labelling of package units in plain text and with alphanumerical Bar Code

Scanner decoding of

- WIMA supplier number
- Customer's P/O number
- Customer's part number
- WIMA confirmation number
- WIMA part number
- Lot number
- Date code
- Quantity

In addition part description of

– article
– capacitance value
– rated voltage
– dimensions
– capacitance tolerance
– packing

as well as gross weight and customer's name are indicated in plain text.

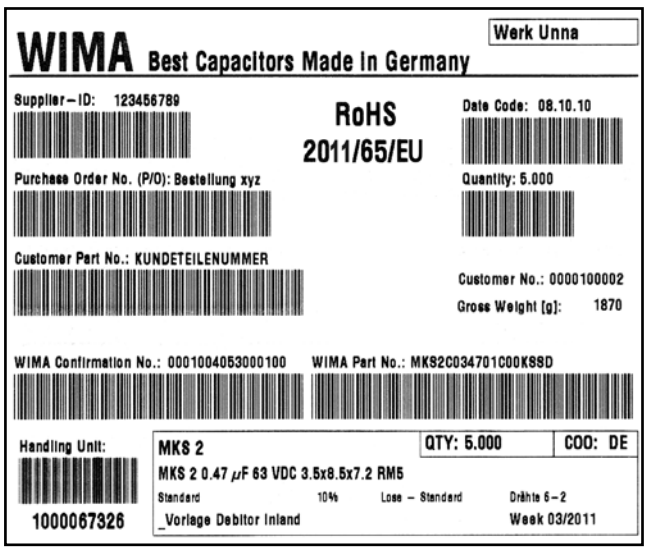

BARCODE „Code 39"

Packing Quantities for Capacitors with Radial Pins in PCM 2.5 mm to 22.5 mm

PCM	Size				pcs. per packing unit										
					bulk	ROLL		REEL				AMMO			
								ø 360		ø 500		340 × 340		490 × 370	
						H16.5	H18.5	H16.5	H18.5	H16.5	H18.5	H16.5	H18.5	H16.5	H18.5
	W	H	L	Codes	S	N	O	F	I	H	J	A	C	B	D
2.5 mm	2.5	7	4.6	**0B**	5000	2200		2500		–		2800		–	
	3	7.5	4.6	**0C**	5000	2000		2300		–		2300		–	
	3.8	8.5	4.6	**0D**	5000	1500		1800		–		1800		–	
	4.6	9	4.6	**0E**	5000	1200		1500		–		1500		–	
	5.5	10	4.6	**0F**	5000	900		1200		–		1200		–	
5 mm	2.5	6.5	7.2	**1A**	5000	2200		2500		–		2800		–	
	3	7.5	7.2	**1B**	5000	2000		2300		–		2300		–	
	3.5	8.5	7.2	**1C**	5000	1600		2000		–		2000		–	
	4.5	6	7.2	**1D**	6000	1300		1500		–		1500		–	
	4.5	9.5	7.2	**1E**	4000	1300		1500		–		1500		–	
	5	10	7.2	**1F**	3500	1100		1400		–		1400		–	
	5.5	7	7.2	**1G**	4000	1000		1200		–		1200		–	
	5.5	11.5	7.2	**1H**	2500	1000		1200		–		1200		–	
	6.5	8	7.2	**1I**	2500	800		1000		–		1000		–	
	7.2	8.5	7.2	**1J**	2500	700		1000		–		1000		–	
	7.2	13	7.2	**1K**	2000	700		950		–		1000		–	
	8.5	10	7.2	**1L**	2000	600		800		–		800		–	
	8.5	14	7.2	**1M**	1500	600		800		–		800		–	
	11	16	7.2	**1N**	1000	500		600		–		400		–	
7.5 mm	2.5	7	10	**2A**	5000	–		2500		4400		2500		–	
	3	8.5	10	**2B**	5000	–		2200		4300		2300		4150	
	4	9	10	**2C**	4000	–		1700		3200		1700		3100	
	4.5	9.5	10.3	**2D**	3500	–		1500		2900		1400		2800	
	5	10.5	10.3	**2E**	3000	–		1300		2500		1300		–	
	5.7	12.5	10.3	**2F**	2000	–		1000		2200		1100		–	
	7.2	12.5	10.3	**2G**	1500	–		900		1800		1000		–	
10 mm	3	9	13	**3A**	3000	–		1100		2200		–		1900	
	4	8.5	13.5	**FA**	3000	–		900		1600		–		1450	
	4	9	13	**3C**	3000	–		900		1600		–		1450	
	4	9.5	13	**3D**	3000	–		900		1600		–		1400	
	5	10	13.5	**FB**	2000	–		700		1300		–		1200	
	5	11	13	**3F**	3000	–		700		1300		–		1200	
	6	12	13	**3G**	2400	–		550		1100		–		1000	
	6	12.5	13	**3H**	2400	–		550		1100		–		1000	
	8	12	13	**3I**	2000	–		400		800		–		740	
15 mm	5	11	18	**4B**	2400	–		600		1200		–		1150	
	5	13	19	**FC**	1000	–		600		1200		–		1200	
	6	12.5	18	**4C**	2000	–		500		1000		–		1000	
	6	14	19	**FD**	1000	–		500		1000		–		1000	
	7	14	18	**4D**	1600	–		450		900		–		850	
	7	15	19	**FE**	1000	–		450		900		–		850	
	8	15	18	**4F**	1200	–		400		800		–		740	
	8	17	19	**FF**	500	–		400		800		–		740	
	9	14	18	**4H**	1200	–		350		700		–		650	
	9	16	18	**4J**	900	–		350		700		–		650	
	10	18	19	**FG**	500	–		300		650		–		590	
	11	14	18	**4M**	1000	–		300		600		–		540	
22.5 mm	5	14	26.5	**5A**	1200	–		–		800		–		770	
	6	15	26.5	**5B**	1000	–		–		700		–		640	
	7	16.5	26.5	**5D**	760	–		–		600		–		550	
	8	20	28	**FH**	500	–		–		500		–		480	
	8.5	18.5	26.5	**5F**	500	–		–		480		–		450	
	10	22	28	**FI**	540*	–		–		420		–		380	
	10.5	19	26.5	**5G**	680*	–		–		400		–		360	
	10.5	20.5	26.5	**5H**	680*	–		–		400		–		360	
	11	21	26.5	**5I**	680*	–		–		380		–		350	
	12	24	28	**FJ**	450*	–		–		350		–		310	

* TPS (Tray-Packing-System). Plate versions may have different packing units. Samples and pre-production needs on request.

Moulded versions.

Rights reserved to amend design data without prior notification.

Packing Quantities for Capacitors with Radial Pins in PCM 27.5 mm to 52.5 mm

PCM	Size				pcs. per packing unit										
					bulk	ROLL		REEL				AMMO			
								ø 360		ø 500		340 × 340		490 × 370	
						H16.5	H18.5	H16.5	H18.5	H16.5	H18.5	H16.5	H18.5	H16.5	H18.5
	W	H	L	Codes	**S**	**N**	**O**	**F**	**I**	**H**	**J**	**A**	**C**	**B**	**D**
27.5 mm	9	19	31.5	**6A**	640*	–		–		460/340*		–		420	
	11	21	31.5	**6B**	544*	–		–		380/280*		–		350	
	13	24	31.5	**6D**	448*	–		–		300		–		290	
	13	25	33	**FK**	336*	–		–		–		–		–	
	15	26	31.5	**6F**	384*	–		–		270		–		250	
	15	26	33	**FL**	288*	–		–		–		–		–	
	17	29	31.5	**6G**	176*	–		–		–		–		–	
	17	34.5	31.5	**6I**	176*	–		–		–		–		–	
	20	32	33	**FM**	216*	–		–		–		–		–	
	20	39.5	31.5	**6J**	144*	–		–		–		–		–	
37.5 mm	9	19	41.5	**7A**	480*	–		–		–		–		–	
	11	22	41.5	**7B**	408*	–		–		–		–		–	
	13	24	41.5	**7C**	252*	–		–		–		–		–	
	15	26	41.5	**7D**	144*	–		–		–		–		–	
	17	29	41.5	**7E**	132*	–		–		–		–		–	
	19	32	41.5	**7F**	108*	–		–		–		–		–	
	20	39.5	41.5	**7G**	108*	–		–		–		–		–	
	24	45.5	41.5	**7H**	84*	–		–		–		–		–	
	27	15	41.5	**7M**	100*										
	31	46	41.5	**7I**	72*	–		–		–		–		–	
	35	50	41.5	**7J**	35*	–		–		–		–		–	
	40	55	41.5	**7K**	28*	–		–		–		–		–	
48.5 mm	19	31	56	**8D**	50*	–		–		–		–		–	
	23	34	56	**8E**	72*	–		–		–		–		–	
	27	37.5	56	**8H**	60*	–		–		–		–		–	
	33	48	56	**8J**	48*	–		–		–		–		–	
	37	54	56	**8L**	25*	–		–		–		–		–	
52.5 mm	35	50	57	**9F**	25*	–		–		–		–		–	
	45	55	57	**9H**	20*	–		–		–		–		–	
	45	65	57	**9J**	20*	–		–		–		–		–	

* for 2-inch transport pitches.

* TPS (Tray-Packing-System). Plate versions may have different packing units. Samples and pre-production needs on request.

Moulded versions.

Rights reserved to amend design data without prior notification.

WIMA Part Number System

A WIMA part number consists of 18 digits and is composed as follows:

Field 1 - 4: Type description
Field 5 - 6: Rated voltage
Field 7 - 10: Capacitance
Field 11 - 12: Size and PCM
Field 13 - 14: Version code (e.g. Snubber versions)
Field 15: Capacitance tolerance
Field 16: Packing
Field 17 - 18: Pin length (untaped)

1	2	3	4	5	6	7	8	9	10	11	12	13	14	15	16	17	18
M	**K**	**S**	**2**	**C**	**0**	**2**	**1**	**0**	**0**	**1**	**A**	**0**	**0**	**M**	**S**	**S**	**D**
MKS 2				63 VDC		0.01 µF				2.5x6.5x7.2		-		20%	bulk	6 -2	

Type description:

SMD-PET	= SMDT
SMD-PEN	= SMDN
SMD-PPS	= SMDI
FKP 02	= FKP0
MKS 02	= MKS0
FKS 2	= FKS2
FKP 2	= FKP2
MKS 2	= MKS2
MKP 2	= MKP2
FKS 3	= FKS3
FKP 3	= FKP3
MKS 4	= MKS4
MKP 4	= MKP4
MKP 10	= MKP1
FKP 4	= FKP4
FKP 1	= FKP1
MKP-X2	= MKX2
MKP-X2 R	= MKXR
MKP-X1 R	= MKX1
MKP-Y2	= MKY2
MP 3-X2	= MPX2
MP 3-X1	= MPX1
MP 3-Y2	= MPY2
MP 3R-Y2	= MPRY
Snubber MKP	= SNMP
Snubber FKP	= SNFP
GTO MKP	= GTOM
DC-LINK MKP 3	= DCP3
DC-LINK MKP 4	= DCP4
DC-LINK MKP 4S	= DCPS
DC-LINK MKP 5	= DCP5
DC-LINK MKP 6	= DCP6
DC-LINK HC	= DCHC

Rated voltage:

50 VDC	= B0
63 VDC	= C0
100 VDC	= D0
250 VDC	= F0
400 VDC	= G0
450 VDC	= H0
600 VDC	= I0
630 VDC	= J0
700 VDC	= K0
800 VDC	= L0
850 VDC	= M0
900 VDC	= N0
1000 VDC	= O1
1100 VDC	= P0
1200 VDC	= Q0
1250 VDC	= R0
1500 VDC	= S0
1600 VDC	= T0
2000 VDC	= U0
2500 VDC	= V0
3000 VDC	= W0
4000 VDC	= X0
6000 VDC	= Y0
250 VAC	= 0W
275 VAC	= 1W
300 VAC	= 2W
305 VAC	= AW
400 VAC	= 3W
440 VAC	= 4W
500 VAC	= 5W
...	

Capacitance:

22 pF	= 0022
47 pF	= 0047
100 pF	= 0100
150 pF	= 0150
220 pF	= 0220
330 pF	= 0330
470 pF	= 0470
680 pF	= 0680
1000 pF	= 1100
1500 pF	= 1150
2200 pF	= 1220
3300 pF	= 1330
4700 pF	= 1470
6800 pF	= 1680
0.01 µF	= 2100
0.022 µF	= 2220
0.047 µF	= 2470
0.1 µF	= 3100
0.22 µF	= 3220
0.47 µF	= 3470
1 µF	= 4100
2.2 µF	= 4220
4.7 µF	= 4470
10 µF	= 5100
22 µF	= 5220
47 µF	= 5470
100 µF	= 6100
220 µF	= 6220
1000 µF	= 7100
1500 µF	= 7150
...	

Size:

4.8x3.3x3 Size 1812	= KA
4.8x3.3x4 Size 1812	= KB
5.7x5.1x3.5 Size 2220	= QA
5.7x5.1x4.5 Size 2220	= QB
7.2x6.1x3 Size 2824	= TA
7.2x6.1x5 Size 2824	= TB
10.2x7.6x5 Size 4030	= VA
12.7x10.2x6 Size 5040	= XA
15.3x13.7x7 Size 6054	= YA
2.5x7x4.6 PCM 2.5	= 0B
3x7.5x4.6 PCM 2.5	= 0C
2.5x6.5x7.2 PCM 5	= 1A
3x7.5x7.2 PCM 5	= 1B
2.5x7x10 PCM 7.5	= 2A
3x8.5x10 PCM 7.5	= 2B
3x9x13 PCM 10	= 3A
4x9x13 PCM 10	= 3C
5x11x18 PCM 15	= 4B
6x12.5x18 PCM 15	= 4C
5x14x26.5 PCM 22.5	= 5A
6x15x26.5 PCM 22.5	= 5B
9x19x31.5 PCM 27.5	= 6A
11x21x31.5 PCM 27.5	= 6B
9x19x41.5 PCM 37.5	= 7A
11x22x41.5 PCM 37.5	= 7B
19x31x56 PCM 48.5	= 8D
35x50x57 PCM 52.5	= 9F
...	

Version code:

Standard	= 00
Version A1	= 1A
Version A1.1.1	= 1B
Version A2	= 2A
...	

Tolerance:

±20%	= M
±10%	= K
±5%	= J
±2.5%	= H
±1%	= E
...	

Packing:

AMMO H16.5 340x340	= A
AMMO H16.5 490x370	= B
AMMO H18.5 340x340	= C
AMMO H18.5 490x370	= D
REEL H16.5 360	= F
REEL H16.5 500	= H
REEL H18.5 360	= I
REEL H18.5 500	= J
ROLL H16.5	= N
ROLL H18.5	= O
BLISTER W12 180	= P
BLISTER W12 330	= Q
BLISTER W16 330	= R
BLISTER W24 330	= T
Bulk/TPS Standard	= S
...	

Pin length (untaped)

3.5 ±0.5	= C9
6 -2	= SD
16 ±1	= P1
...	

The data on this page is not complete and serves only to explain the part number system. Part number information is listed on the pages of the respective WIMA range.

11.14