DATALOGIC™

This product is covered by one or more of the following patents.
European Patent 851,211 B1; 1,111,690 B1; 1,148,346 B1; 1,209,487 B1.
Italian Patent IT 1,321,772.

S50-Px SERIES

INSTRUCTION MANUAL

CONTROLS

OUTPUT LED (S50-Px…A00/B01/C01/C10/C21/E01/F01/T01)
The yellow LED ON indicates that the NO output status is closed.

STABILITY LED (S50-Px…B01/C01/C21/E01/F01)
The green LED ON indicates that the received signal has a reserve greater than 30% compared to the output switching value.

POWER ON LED (S50-Px…G00)
The green LED indicates that the sensor is operating.

TRIMMER (S50-Px…B01/C01/C21/E01/F01/T01)
The trimmer can be used to adjust sensitivity; the operating distance increases turning the trimmer clockwise.

WARNING: *The trimmer rotation is limited to 270° by a mechanical stop. Do not apply excessive torque when adjusting (max 40 Nmm).*

INSTALLATION

The sensor can be fixed by means of the M18x1 threaded body through a ∅ 18mm hole, using the specific washer and the two CH.24 nuts enclosed (1.5Nm maximum tightening torque).
Alternatively, the sensor can be mounted through the two housing's holes using two screws (M3x22 or longer) and washer.
Amongst the various possible solutions, we suggest to choose the combination that offers the best visibility of the signalling LEDs and the easiest access to the trimmer.
Wide range of accessories available: 22mm nuts, h=8mm, (2Nm maximum tightening torque) guarantee an improved torque and various orientable fixing brackets ease the sensor positioning (please refer to the accessories listed in the general catalogue).
The operating distance is measured from the front surface of the sensor lens.
C/D models: To improve the detection, the object has to be moved closer or further away from the front surface of the sensor lens.
In case of lateral translation, the object must move as indicated in the figure.

CONNECTIONS

The connections are compliant to the EN 60947-5-2 standard.

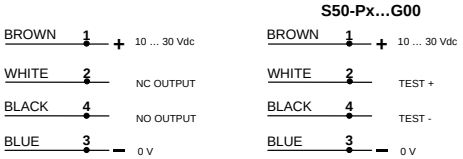

S50-Px…G00

M12 CONNECTOR

DIMENSIONS

AXIAL VERSION

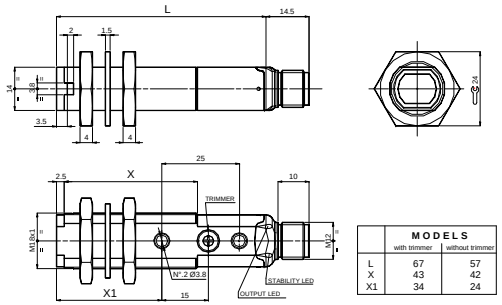

	MODELS	
	with trimmer	without trimmer
L	67	57
X	43	42
X1	34	24

RADIAL VERSION

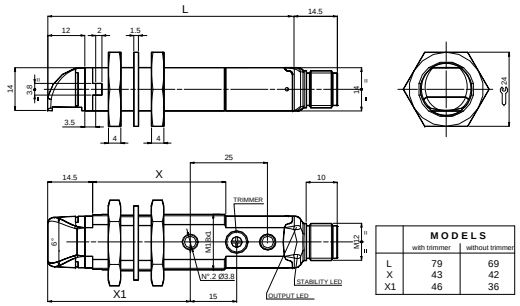

	MODELS	
	with trimmer	without trimmer
L	79	69
X	43	42
X1	46	36

FIBRE OPTIC VERSION

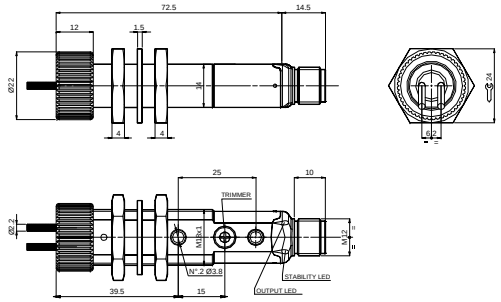

mm

CABLE VERSION

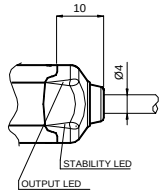

TECHNICAL DATA

	S50-PA AXIAL VERSION	S50-PR RADIAL VERSION
Power supply:	10 … 30 Vdc (limit values)	
Ripple:	2 Vpp max.	
Current consumption (output current excluded):	35 mA max.	
Outputs:	NO and NC; PNP or NPN (short-circuit protection)	
Output current:	100 mA max.	
Output saturation voltage:	2 V max.	
Response time:	0.5 ms (2 ms mod.F01/G00)	
Switching frequency:	1KHz (250 Hz mod.F01/G00)	
Indicators:	OUTPUT LED (YELLOW) excluding mod.G00 STABILITY LED (GREEN) (mod.B01/C01/C21/E01/F01) POWER ON LED (GREEN) (mod.G00)	
Setting:	sensitivity trimmer (mod.B01/C01/C21/E01/F01/T01)	
Operating temperature:	-25 … 55 °C	
Storage temperature:	-25 … 70 °C	
Insulating strength:	500 Vac 1 min., between electronics and housing	
Insulating resistance:	>20 MΩ 500 Vdc, between electronics and housing	
Operating distance (typical values):	A00: 0.1…4m on R2 B01: 0.1…3.5m on R2 C01: 0…60cm C10: 0…10cm C21: 0…35cm D00: 0.5…10cm F01/G00: 0…25m E01: 30mm with OF-42 / 100mm with OF-43 T01: 0.1…1m on R2	B01: 0.1…2m on R2 C01: 0…35cm C10: 0…8cm D00: 0…8cm F01/G00: 0…20m T01: 0.1…1m on R2
Emission type:	red (630 nm) (mod.D00/E01) / red (660 nm) (mod.B01/T01) / infrared (880nm) (mod.A00/C01/C10/C21/G00)	
Ambient light rejection:	according to EN 60947-5-2	
Vibrations:	0.5 mm amplitude, 10 … 55 Hz frequency, for every axis (EN60068-2-6)	
Shock resistance:	11 ms (30 G) 6 shock for every axis (EN60068-2-27)	
Housing material:	PBT	
Lens material:	PMMA	
Mechanical protection:	IP67	
Connections:	2 m cable ∅ 4 mm / M12 - 4 pole connector	
Weight:	75 g. max. cable vers. / 25 g. max. connector vers.	

SETTING

Setting of S50-Px…A00
Position the sensor and reflector on opposite sides.
Find the points where the yellow LED (OUT) is switched ON and OFF in both vertical and horizontal positions, and fix the sensor in the centre between these points.

Setting of S50-Px…B01/T01
Position the sensor and reflector on opposite sides.
Turn the sensitivity trimmer to the maximum position.
Moving the sensor both vertically and horizontally, determine the power on and off points of the yellow LED (OUT) and then mount the sensor in the middle of the points defined. Optimum operation is obtained when the green LED (mod.B01) is ON and the yellow LED is OFF.
B01 models: If necessary reduce sensitivity in order to detect very small targets. In order to improve alignment, repeat the procedure detailed above whilst progressively reducing the sensitivity.

T01 model: Turn the sensitivity trimmer counterclockwise until the yellow LED turns ON *(pos.A).* Turn slowly the trimmer again clockwise until the yellow LED turns OFF *(Operating condition, pos.B).*

Setting of S50-Px…F01/G00/E01 with OF-43 (P/R fibre-optics)
Position the sensors (fibre terminals) on opposite sides.
Turn the sensitivity trimmer to maximum: moving the sensor both vertically and horizontally, determine the power on and off points of the yellow LED (OUT) and then mount the sensor in the middle of the points defined. Optimum operation is obtained when the green LED is ON and the yellow LED is OFF (the output function and the relative LEDs are inverted in the E01 model with the OF-43 fibre).
If necessary, reduce sensitivity using the trimmer, in order to detect very small targets. In order to improve alignment, repeat the procedure detailed above whilst progressively reducing the sensitivity.

Setting of S50-Px…C01/C21/E01 with OF-42 (proximity fibre)
Turn the sensitivity trimmer to minimum: the green LED is ON, the yellow LED is OFF. Position the target to detect in front of the sensor or of the fibre terminals. Turn the sensitivity trimmer clockwise until the yellow LED turns ON *(Target detected state, pos.A).*
Remove the target, the yellow LED turns OFF.
Turn the sensitivity trimmer clockwise until the yellow LED turns ON *(Background detected state, pos.B).*
The trimmer reaches maximum if the background is not detected.
Turn the trimmer to the intermediate position C, between the two positions A and B. The green LED must be ON.

Setting of S50-Px…C10/D00
The operating distance range of these sensors is factory preset: please consider this feature when positioning.

TEST FUNCTION (S50-Px…G00)

The TEST+ and TEST- inputs can be used to inhibit the emitter and verify that the system is correctly operating.
The receiver output should switch when the test is activated while the beam is uninterrupted.
The inputs activating voltage range is 10 … 30 VDC.

DECLARATION OF CONFORMITY
We DATALOGIC AUTOMATION declare under our sole responsibility that these products are conform to the 2004/108/CE and successive amendments.

WARRANTY
DATALOGIC AUTOMATION warrants its products to be free from defects.
DATALOGIC AUTOMATION will repair or replace, free of charge, any product found to be defective during the warranty period of 36 months from the manufacturing date.
This warranty does not cover damage or liability deriving from the improper application of DATALOGIC AUTOMATION products.

DATALOGIC AUTOMATION
Via Lavino 265 - 40050 Monte S.Pietro - Bologna – Italy
Tel: +39 051 6765611 - Fax: +39 051 6759324
www.automation.datalogic.com e-mail:info.automation.it@datalogic.com

DATALOGIC AUTOMATION cares for the environment: 100% recycled paper.
DATALOGIC AUTOMATION reserves the right to make modifications and improvements without prior notification.

Datalogic and the Datalogic logo are registered trademarks of Datalogic S.p.A. in many countries, including the U.S.A. and the E.U.

826001246 Rev.I

© Copyright Datalogic 2007-2010