# WIMA Snubber FKP

## Snubber FKP Capacitors for High Pulse Applications with Metal Foil Electrodes, Schoopage Contacts and Self-Healing Internal Series Connection

### Special Features

- **High pulse duty**
- **Self-healing**
- **Particularly reliable contact-configurations: 4-pin versions and screwable plate connections**
- **Internal series connection**
- **Very low dissipation factor**
- **Negative capacitance change versus temperature**
- **According to RoHS 2011/65/EU**

### Typical Applications

**For high pulse and high frequency applications requiring extremely reliable contacts e.g.**

- **IGBT-applications**

### Construction

**Dielectric:**
Polypropylene (PP) film
**Capacitor electrodes:**
Aluminium foil and single-sided metallized plastic film
**Internal construction:**

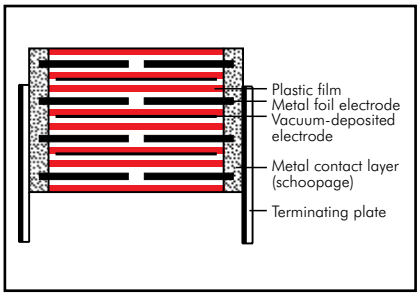


**Encapsulation:**
Solvent-resistant, flame-retardant plastic case with epoxy resin seal, UL 94 V-0
**Terminations:**
Tinned wire or plates.
**Marking:**
Colour: Red. Marking: Black.
Epoxy resin seal: Red

### Electrical Data

**Capacitance range:** 0.01 µF to 2.2 µF
**Rated voltages:**
630 VDC, 1000 VDC, 1600 VDC, 2000 VDC, 3000 VDC, 4000 VDC
**Capacitance tolerances:**
±20%, ±10%, ±5% (other tolerances are available subject to special enquiry)
**Operating temperature range:**
–55° C to +100° C
**Insulation resistance** at +20° C:
C ⩽ 0.33 µF: ⩾ 1 x $10^5$ MΩ
(mean value: 5 x $10^5$ MΩ)
C > 0.33 µF: ⩾ 30 000 sec (MΩ x µF)
(mean value: 100 000 sec)
Measuring voltage: 100 V/1 min.
**Test voltage:** 2 sec

| L | ⩽ 2000 VDC | ⩾ 3000 VDC |
|---|---|---|
| < 41.5 | 1.6 $U_r$ | 1.2 $U_r$ |
| 41.5 | 1.4 $U_r$ | 1.2 $U_r$ |
| 56 | 1.2 $U_r$ | 1.2 $U_r$ |

**Climatic test category:**
55/100/56 in accordance with IEC
**Voltage derating:**
A voltage derating factor of 1.35 % per K must be applied from +85° C for DC voltages and from +75° C for AC voltages
**Reliability:**
Operational life > 300 000 hours
Failure rate < 1 fit (0.5 x $U_r$ and 40° C)
**Specific dissipation:**

| Box size* WxHxL in mm | Specific dissipation in Watts per K above the ambient temperature |
|---|---|
| 19x31x56 | 0.068 |
| 23x34x56 | 0.079 |
| 27x37.5x56 | 0.092 |
| 33x48x56 | 0.122 |
| 37x54x56 | 0.142 |

* other box sizes see page 11.

**Dissipation factors** at + 20° C: tan δ

| at f | C ⩽ 0.1 µF | 0.1 µF < C ⩽ 1.0 µF | C > 1.0 µF |
|---|---|---|---|
| 1 kHz | ⩽ 3 x $10^{-4}$ | ⩽ 3 x $10^{-4}$ | ⩽ 3 x $10^{-4}$ |
| 10 kHz | ⩽ 4 x $10^{-4}$ | ⩽ 6 x $10^{-4}$ | – |
| 100 kHz | ⩽ 15 x $10^{-4}$ | – | – |

**Maximum pulse rise time:**

| Capacitance µF | max. pulse rise time V/µsec at $T_A$ < 40° C | | | | | |
|---|---|---|---|---|---|---|
| | 630 VDC | 1000 VDC | 1600 VDC | 2000 VDC | 3000 VDC | 4000 VDC |
| 0.01 ... 0.022 | – | 11000 | 11000 | 11000 | 11000 | 11000 |
| 0.033 ... 0.068 | 9000 | 9000 | 9000 | 9000 | 9000 | 9000 |
| 0.1 ... 0.22 | 9000 | 9000 | 9000 | 9000 | 9000 | 9000 |
| 0.33 ... 0.68 | 5000 | 5000 | 5000 | 5000 | 5000 | 5000 |
| 1.0 ... 2.2 | 1600 | 2000 | – | – | – | – |

for pulses equal to the rated voltage

### Mounting Recommendation

Excessive mechanical strain, e.g. pressure or shock onto the capacitor body, is to be avoided during mounting and usage of the capacitors. When fixing the plates the screw torque is to be limited to max. 5 Nm.

For further details and graphs please refer to Technical Information.

### Packing

Packing units at the end of the catalogue.

Packing quantities may vary depending on the plate version.

## Continuation

### General Data

| Capacitance | 630 VDC/400 VAC* | | | | 1000 VDC/600VAC* | | | |
|---|---|---|---|---|---|---|---|---|
| | W | H | L | Part number | W | H | L | Part number |
| 0.022 „ | | | | | 7 | 16.5 | 26.5 | SNFPO122205D_____ |
| 0.033 „ | | | | | 8.5 | 18.5 | 26.5 | SNFPO123305F_____ |
| 0.047 „ | 7 | 16.5 | 26.5 | SNFPJ024705D_____ | 10.5 | 20.5 | 26.5 | SNFPO124705H_____ |
| 0.068 „ | 8.5 | 18.5 | 26.5 | SNFPJ026805F_____ | 11 | 21 | 31.5 | SNFPO126806B_____ |
| 0.1 µF | 10.5 | 20.5 | 26.5 | SNFPJ031005H_____ | 11 | 22 | 41.5 | SNFPO131007B_____ |
| 0.15 „ | 11 | 21 | 26.5 | SNFPJ031505I_____ | 15 | 26 | 41.5 | SNFPO131507D_____ |
| 0.22 „ | 13 | 24 | 31.5 | SNFPJ032206D_____ | 17 | 29 | 41.5 | SNFPO132207E_____ |
| 0.33 „ | 15 | 26 | 31.5 | SNFPJ033306F_____ | 19 | 32 | 41.5 | SNFPO133307F_____ |
| 0.47 „ | 17 | 29 | 41.5 | SNFPJ034707E_____ | 20 | 39.5 | 41.5 | SNFPO134707G_____ |
| 0.68 „ | 19 | 32 | 41.5 | SNFPJ036807F_____ | 24 | 45.5 | 41.5 | SNFPO136807H_____ |
| | | | | | 23 | 34 | 56 | SNFPO136808E_____ |
| 1.0 µF | 20 | 39.5 | 41.5 | SNFPJ041007G_____ | 31 | 46 | 41.5 | SNFPO141007I_____ |
| | | | | | 27 | 37.5 | 56 | SNFPO141008H_____ |
| 1.5 „ | 24 | 45.5 | 41.5 | SNFPJ041507H_____ | | | | |
| 2.2 „ | 27 | 37.5 | 56 | SNFPJ042208H_____ | | | | |

| Capacitance | 1600 VDC/650 VAC* | | | | 2000 VDC/700 VAC* | | | |
|---|---|---|---|---|---|---|---|---|
| | W | H | L | Part number | W | H | L | Part number |
| 0.01 µF | 7 | 16.5 | 26.5 | SNFPT021005D_____ | 10.5 | 20.5 | 26.5 | SNFPU021005H_____ |
| 0.015 „ | 8.5 | 18.5 | 26.5 | SNFPT021505F_____ | 11 | 21 | 26.5 | SNFPU021505I_____ |
| 0.022 „ | 10.5 | 20.5 | 26.5 | SNFPT022205H_____ | 11 | 21 | 31.5 | SNFPU022206B_____ |
| | | | | | 11 | 22 | 41.5 | SNFPU022207B_____ |
| 0.033 „ | 11 | 21 | 31.5 | SNFPT023306B_____ | 13 | 24 | 41.5 | SNFPU023307C_____ |
| 0.047 „ | 11 | 22 | 41.5 | SNFPT024707B_____ | 15 | 26 | 41.5 | SNFPU024707D_____ |
| 0.068 „ | 15 | 26 | 41.5 | SNFPT026807D_____ | 17 | 29 | 41.5 | SNFPU026807E_____ |
| 0.1 µF | 17 | 29 | 41.5 | SNFPT031007E_____ | 17 | 29 | 41.5 | SNFPU031007E_____ |
| 0.15 „ | 19 | 32 | 41.5 | SNFPT031507F_____ | 20 | 39.5 | 41.5 | SNFPU031507G_____ |
| 0.22 „ | 20 | 39.5 | 41.5 | SNFPT032207G_____ | 24 | 45.5 | 41.5 | SNFPU032207H_____ |
| 0.33 „ | 24 | 45.5 | 41.5 | SNFPT033307H_____ | 31 | 46 | 41.5 | SNFPU033307I_____ |
| | | | | | 27 | 37.5 | 56 | SNFPU033308H_____ |
| 0.47 „ | 31 | 46 | 41.5 | SNFPT034707I_____ | 27 | 37.5 | 56 | SNFPU034708H_____ |
| | 27 | 37.5 | 56 | SNFPT034708H_____ | | | | |
| 0.68 „ | 27 | 37.5 | 56 | SNFPT036808H_____ | | | | |

* AC voltage: f ⩽ 1000 Hz; 1.4 x $U_{rms}$ + UDC ⩽ $U_r$

Dims. in mm.

Ionisation inception level in isolated cases may be lower than admissible rated AC voltage.

Versions and dimensional drawings see page 105.

| Part number completion: | |
|---|---|
| Version codes see page 108. | |
| Tolerance: | 20 % = M |
| | 10 % = K |
| | 5 % = J |
| Packing: | bulk = S |
| Pin length: | 6-2 = SD |
| | none = 00 (for plate versions) |

Rights reserved to amend design data without prior notification.

Continuation page 104

## Continuation

### General Data

| Capacitance | 3000 VDC/700 VAC* W | H | L | Part number | 4000 VDC/700 VAC* W | H | L | Part number |
|---|---|---|---|---|---|---|---|---|
| 0.01 µF | 11 | 21 | 26.5 | SNFPW021005I_____ | 11 | 21 | 31.5 | SNFPX021006B_____ |
| 0.015 „ | 11 | 21 | 31.5 | SNFPW021506B_____ | 11 | 22 | 41.5 | SNFPX021507B_____ |
| 0.022 „ | 13 | 24 | 31.5 | SNFPW022206D_____ | 13 | 24 | 41.5 | SNFPX022207C_____ |
| 0.033 „ | 13 | 24 | 41.5 | SNFPW023307C_____ | 15 | 26 | 41.5 | SNFPX023307D_____ |
| 0.047 „ | 15 | 26 | 41.5 | SNFPW024707D_____ | 17 | 29 | 41.5 | SNFPX024707E_____ |
| 0.068 „ | 17 | 29 | 41.5 | SNFPW026807E_____ | 19 | 32 | 41.5 | SNFPX026807F_____ |
| 0.1 µF | 19 | 32 | 41.5 | SNFPW031007F_____ | 20 | 39.5 | 41.5 | SNFPX031007G_____ |
| 0.15 „ | 20 | 39.5 | 41.5 | SNFPW031507G_____ | 24 | 45.5 | 41.5 | SNFPX031507H_____ |
| 0.22 „ | 24 | 45.5 | 41.5 | SNFPW032207H_____ | 31 | 46 | 41.5 | SNFPX032207I_____ |
| | | | | | 27 | 37.5 | 56 | SNFPX032208H_____ |
| 0.33 „ | 31 | 46 | 41.5 | SNFPW033307I_____ | 33 | 48 | 56 | SNFPX033308J_____ |
| | 27 | 37.5 | 56 | SNFPW033308H_____ | | | | |
| 0.47 „ | 33 | 48 | 56 | SNFPW034708J_____ | | | | |

* AC voltage: f ⩽ 1000 Hz; 1.4 x $U_{rms}$ + UDC ⩽ $U_r$

Dims. in mm.

Ionisation inception level in isolated cases may be lower than admissible rated AC voltage.

Versions and dimensional drawings see page 105.

| Part number completion: | |
|---|---|
| Version codes see page 108. | |
| Tolerance: | 20 % = M |
| | 10 % = K |
| | 5 % = J |
| Packing: | bulk = S |
| Pin length: | 6-2 = SD |
| | none = 00 (for plate versions) |

Rights reserved to amend design data without prior notification.

Permissible AC voltage in relation to frequency at 10° C internal temperature rise (general guide).

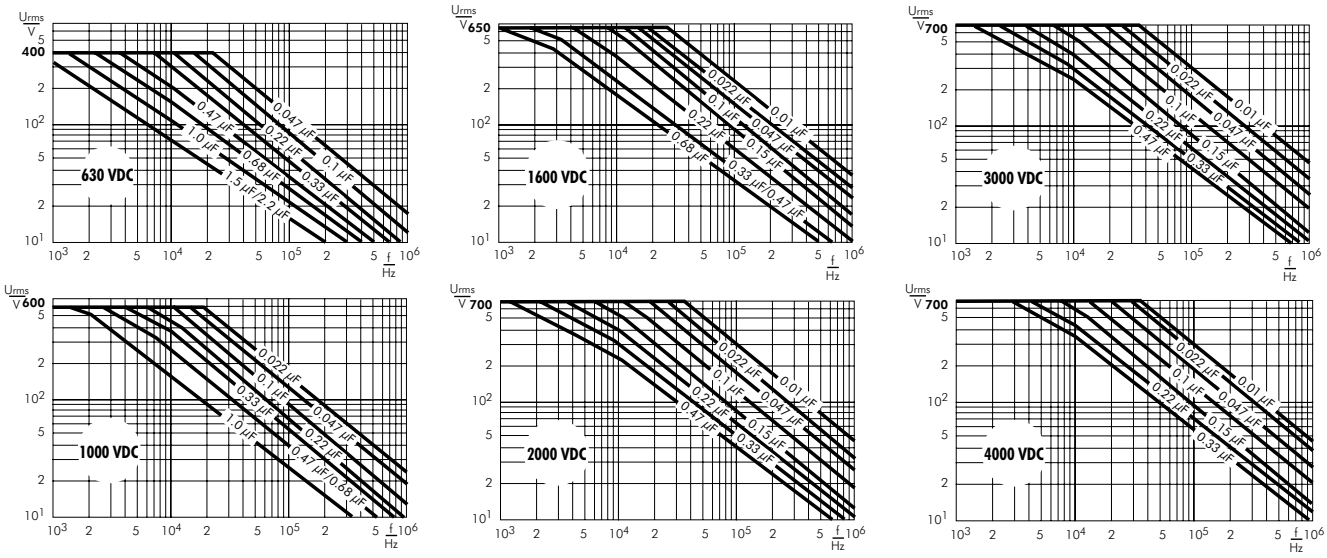

# Versions of WIMA Snubber Capacitors

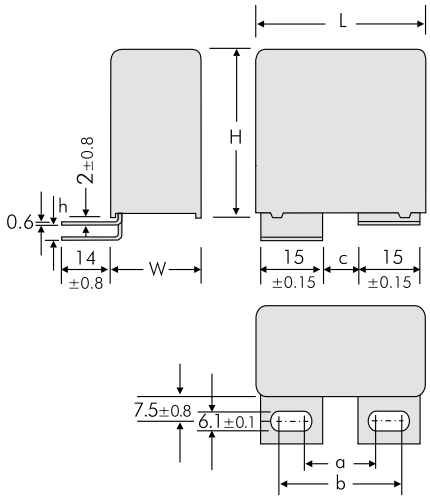


| Version | L | a ±0.5 | b ±0.5 | c ±0.5 | h ±0.8 |
|---|---|---|---|---|---|
| **A1** | 41.5 | 17.5 | 27.5 | 7.5 | 0 |
| **A1.5** | 41.5 | 17.5 | 27.5 | 7.5 | 3.5 |
| **A1** | 56 | 20 | 30 | 10 | 0 |
| **A1.1.1** | 56 | 28 | 38 | 18 | 0 |
| **A1.4** | 56 | 20 | 30 | 10 | 3.5 |
| **A1.4.1** | 56 | 28 | 38 | 18 | 3.5 |

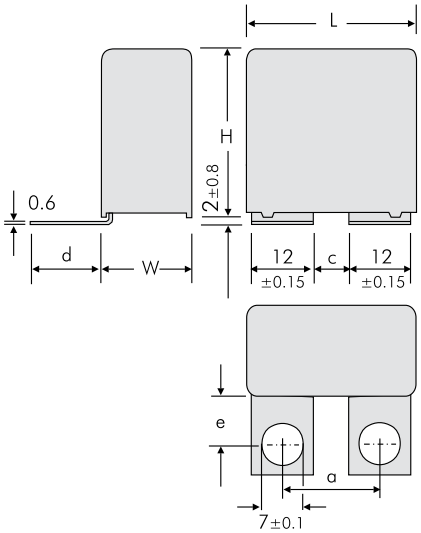


| Version | L | a ±0.5 | c ±0.5 | d ±0.8 | e ±0.8 |
|---|---|---|---|---|---|
| **A1.6** | 41.5 | 18 | 6 | 21.5 | 16 |
| **A1.6.1** | 41.5 | 22 | 10 | 18.5 | 13 |
| **A1.6** | 56 | 29 | 17 | 21.5 | 16 |

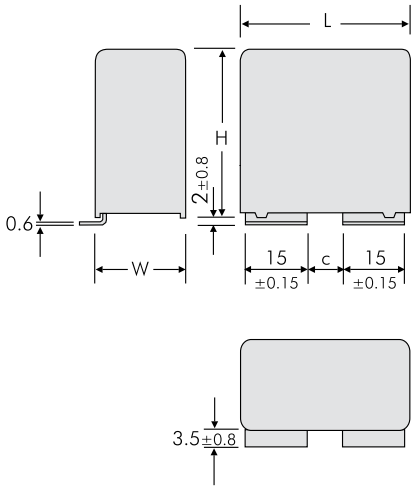


| Version | L | c ±0.5 |
|---|---|---|
| **A1.7** | 41.5 | 7.5 |
| **A1.7** | 56 | 10 |
| **A1.7.1** | 56 | 18 |

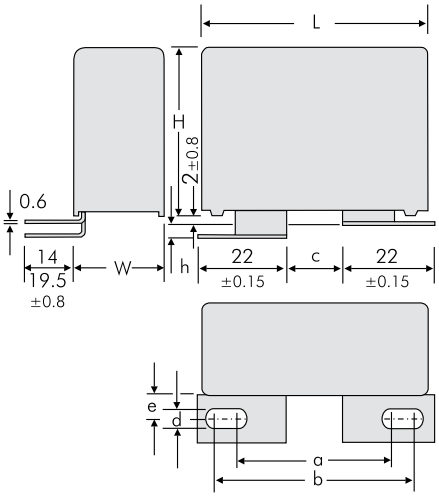


| Version | L | a ±0.5 | b ±0.5 | c ±0.5 | d ±0.1 | e ±0.8 | h ±0.8 |
|---|---|---|---|---|---|---|---|
| **A2** | 41.5 | 40.5 | 46.5 | 14.5 | 8.4 | 7.5 | 0 |
| **A2.2** | 41.5 | 31 | 37 | 5 | 8.4 | 7.5 | 3.5 |
| **A2.3** | 41.5 | 31 | 37 | 5 | 8.4 | 13 | 3.5 |
| **A2.4** | 41.5 | 33.5 | 39.5 | 7.5 | 8.4 | 13 | 3.5 |
| **A2.4.1** | 41.5 | 33.5 | 39.5 | 7.5 | 8.4 | 13 | 0 |
| **A2.5** | 41.5 | 29.5 | 39.5 | 5.5 | 6.1 | 7.5 | 3.5 |
| **A2.6** | 41.5 | 31.5 | 41.5 | 7.5 | 6.1 | 13 | 3.5 |
| **A2.6.1** | 41.5 | 31.5 | 41.5 | 14 | 6.1 | 13 | 3.5 |
| **A2.6.2** | 41.5 | 31.5 | 41.5 | 14 | 6.1 | 13 | 0 |
| **A2.8** | 41.5 | 40.5 | 46.5 | 14.5 | 8.4 | 7.5 | 3.5 |
| **A2.1** | 56 | 39.5 | 45.5 | 13.5 | 8.4 | 7.5 | 0 |
| **A2.7** | 56 | 39.5 | 45.5 | 13.5 | 8.4 | 7.5 | 3.5 |

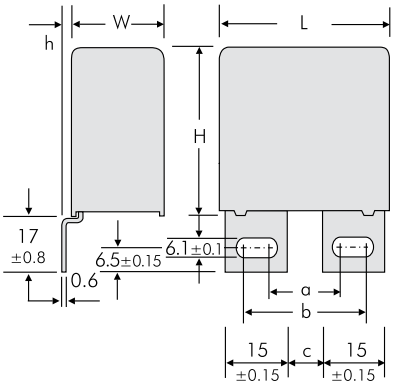


| Version | L | a ±0.5 | b ±0.5 | c ±0.5 | h ±0.8 |
|---|---|---|---|---|---|
| **A3** | 41.5 | 17.5 | 27.5 | 7.5 | 0 |
| **A3.5** | 41.5 | 17.5 | 27.5 | 7.5 | 3 |
| **A3** | 56 | 20 | 30 | 10 | 0 |
| **A3.1** | 56 | 28 | 38 | 18 | 0 |
| **A3.5** | 56 | 20 | 30 | 10 | 3 |
| **A3.10** | 56 | 28 | 38 | 18 | 3 |

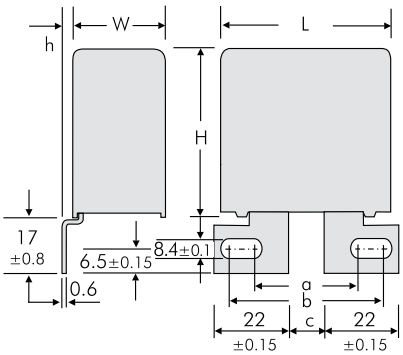


| Version | L | a ±0.5 | b ±0.5 | c ±0.5 | h ±0.8 |
|---|---|---|---|---|---|
| **A3.9** | 41.5 | 40.5 | 46.5 | 14.5 | 0 |
| **A3.11** | 41.5 | 40.5 | 46.5 | 14.5 | 3 |
| **A3.2** | 56 | 40.5 | 46.5 | 14.5 | 0 |
| **A3.3** | 56 | 40.5 | 46.5 | 14.5 | 3 |

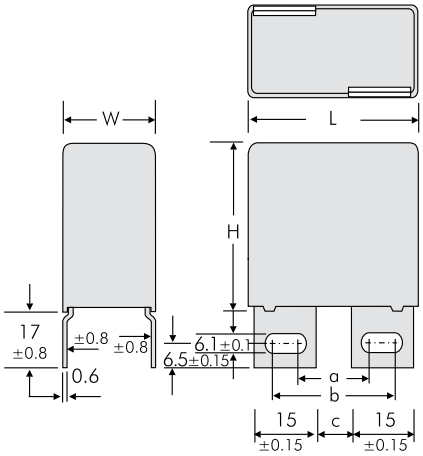


| Version | L | a ±0.5 | b ±0.5 | c ±0.5 |
|---|---|---|---|---|
| **A3.6** | 41.5 | 17.5 | 27.5 | 7.5 |
| **A3.7** | 56 | 20 | 30 | 10 |

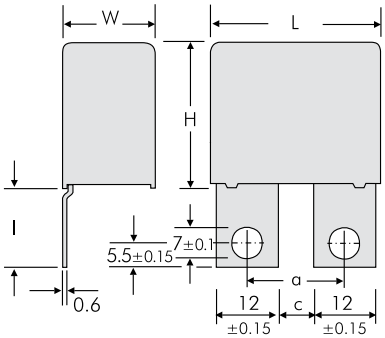


| Version | L | a ±0.5 | c ±0.5 | l ±0.8 |
|---|---|---|---|---|
| **A3.8** | 41.5 W⩾17 | 18 | 6 | 23 |
| **A3.8.1** | 41.5 W⩾17 | 22 | 10 | 17.5 |

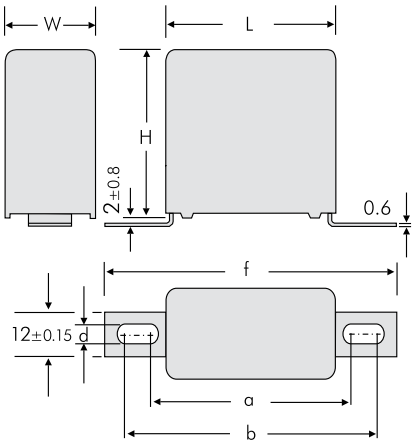


| Version | L | a ±0.8 | b ±0.8 | f ±0.8 | d ±0.1 |
|---|---|---|---|---|---|
| **A4.9** | 31.5 W ⩾15 | 44 | 47 | 57 | 4.5 |
| **A4.10** | 31.5 W ⩾15 | 43 | 59 | 69 | 6.1 |
| **A4.2** | 41.5 W ⩾15 | 54 | 57 | 67 | 4.5 |
| **A4** | 41.5 W ⩾15 | 53 | 69 | 79 | 6.1 |
| **A4.7** | 56 | 65 | 68 | 78 | 4.5 |
| **A4** | 56 | 64 | 80 | 90 | 6.1 |

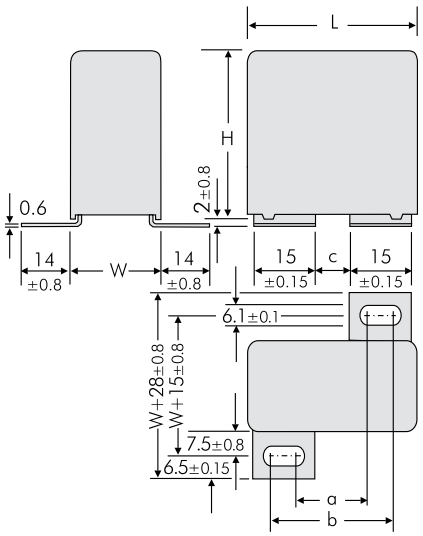


| Version | L | a ±0.5 | b ±0.5 | c ±0.5 |
|---|---|---|---|---|
| **A5** | 41.5 | 17.5 | 27.5 | 7.5 |
| **A5** | 56 | 20 | 30 | 10 |

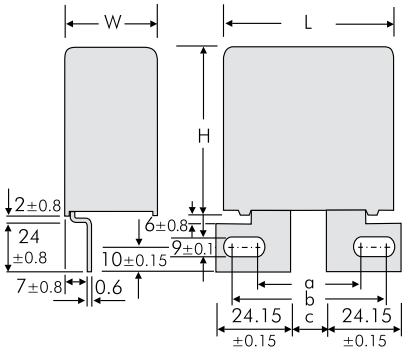


| Version | L | a ±0.5 | b ±0.5 | c ±0.5 |
|---|---|---|---|---|
| **A6** | 56 W ⩾ 23 | 41.5 | 45.5 | 15.5 |

# Versions of WIMA Snubber Capacitors

**Version FS 6.3**
with slip-on terminals according to DIN 46244

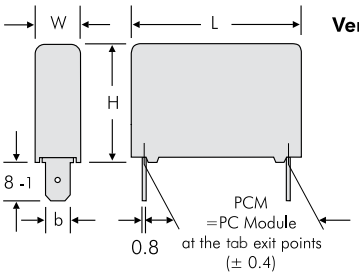


| L | W | PCM | b ±0.15 |
|---|---|---|---|
| 26.5 | ⩾ 11 | 23.5 | 6.3 |
| 31.5 | ⩾ 11 | 28.5 | 6.3 |
| 41.5 | ⩾ 11 | 38.5 | 6.3 |
| 56 | ⩾ 11 | 49.5 | 6.3 |

**Version B***

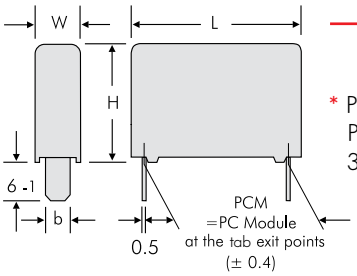


| L | PCM | b ±0.15 |
|---|---|---|
| 18 | 16 | 5 |
| 26.5 | 23.5 | 5 |
| 31.5 | 28.5 | 8 |
| 41.5 | 38.5 | 8 |
| 56 | 49.5 | 8 |

* Processing notification:
Processing should be done within 3 month after manufacturing.

**2-pin version**

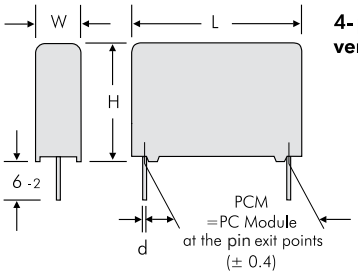


| PCM | d |
|---|---|
| 15 | 0.8 |
| 22.5 | 0.8 |
| 27.5 | 0.8 |
| 38.5 | 1.2 |
| 49.5 | 1.2 |

**4-pin version**

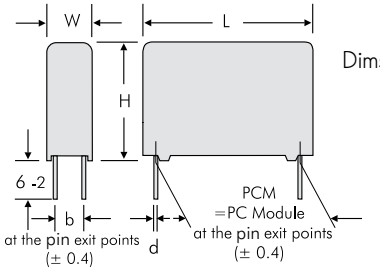


| W | H | L | PCM | b | d |
|---|---|---|---|---|---|
| 10.5 | 19 | 26.5 | 22.5 | 5 | 0.8 |
| 10.5 | 20.5 | 26.5 | 22.5 | 5 | 0.8 |
| 11 | 21 | 26.5 | 22.5 | 5 | 0.8 |
| 11 | 21 | 31.5 | 27.5 | 5 | 0.8 |
| 13 | 24 | 31.5 | 27.5 | 7.5 | 0.8 |
| 15 | 26 | 31.5 | 27.5 | 7.5 | 0.8 |
| 17 | 29 | 31.5 | 27.5 | 10 | 0.8 |
| 17 | 34.5 | 31.5 | 27.5 | 10 | 0.8 |
| 20 | 39.5 | 31.5 | 27.5 | 12.5 | 0.8 |
| 22 | 43.5 | 31.5 | 27.5 | 12.5 | 0.8 |
| 11 | 22 | 41.5 | 37.5 | 5 | 1 |
| 13 | 24 | 41.5 | 37.5 | 7.5 | 1 |
| 15 | 26 | 41.5 | 37.5 | 7.5 | 1 |
| 17 | 29 | 41.5 | 37.5 | 10 | 1 |
| 19 | 32 | 41.5 | 37.5 | 10 | 1 |
| 20 | 39.5 | 41.5 | 37.5 | 12.5 | 1 |
| 24 | 45.5 | 41.5 | 37.5 | 12.5 | 1 |
| 31 | 46 | 41.5 | 37.5 | 20 | 1 |
| 19 | 31 | 56 | 48.5 | 12.5 | 1 |
| 23 | 34 | 56 | 48.5 | 15 | 1 |
| 27 | 37.5 | 56 | 48.5 | 15 | 1 |
| 33 | 48 | 56 | 48.5 | 20 | 1 |
| 37 | 54 | 56 | 48.5 | 20 | 1 |

Dims. in mm.

Additional special versions can be realized. Please contact us with your specific needs.

# Versions of WIMA Snubber Capacitors

| Version code | | D2 | D4 | B5* | B8* | 1A | 1B | 1F | 1G | 1H | 1I | 1J | 1K | 1L | 2A | 2B | 2C | 2D | 2E | 2F | 2H | 2I | 2J | 2K | 2L | 2M | 3A | 3C | 3D | 3E | 3G | 3I | 3J | 3K | 3L | 3N | 3O | 3P |
|---|---|---|---|---|---|---|---|---|---|---|---|---|---|---|---|---|---|---|---|---|---|---|---|---|---|---|---|---|---|---|---|---|---|---|---|---|---|---|
| W x H x L | Size code | 2-pin | 4-pin | B5 | B8 | A1 | A1.1.1 | A1.4 | A1.4.1 | A1.5 | A1.6 | A1.6.1 | A1.7 | A1.7.1 | A2 | A2.1 | A2.2 | A2.3 | A2.4 | A2.4.1 | A2.5 | A2.6 | A2.6.1 | A2.6.2 | A2.7 | A2.8 | A3 | A3.1 | A3.2 | A3.3 | A3.5 | A3.6 | A3.7 | A3.8 | A3.8.1 | A3.9 | A3.10 | A3.11 |
| 7 x 14 x 18 | **4D** | ■ | | ■ | | | | | | | | | | | | | | | | | | | | | | | | | | | | | | | | | | |
| 8 x 15 x 18 | **4F** | ■ | | ■ | | | | | | | | | | | | | | | | | | | | | | | | | | | | | | | | | | |
| 7 x 16.5 x 26.5 | **5D** | ■ | | ■ | | | | | | | | | | | | | | | | | | | | | | | | | | | | | | | | | | |
| 8.5 x 18.5 x 26.5 | **5F** | ■ | | ■ | | | | | | | | | | | | | | | | | | | | | | | | | | | | | | | | | | |
| 10.5 x 19 x 26.5 | **5G** | ■ | ■ | ■ | | | | | | | | | | | | | | | | | | | | | | | | | | | | | | | | | | |
| 10.5 x 20.5 x 26.5 | **5H** | ■ | ■ | ■ | | | | | | | | | | | | | | | | | | | | | | | | | | | | | | | | | | |
| 11 x 21 x 26.5 | **5I** | ■ | ■ | ■ | | | | | | | | | | | | | | | | | | | | | | | | | | | | | | | | | | |
| 11 x 21 x 31.5 | **6B** | ■ | ■ | | ■ | | | | | | | | | | | | | | | | | | | | | | | | | | | | | | | | | |
| 13 x 24 x 31.5 | **6D** | ■ | ■ | | ■ | | | | | | | | | | | | | | | | | | | | | | | | | | | | | | | | | |
| 15 x 26 x 31.5 | **6F** | ■ | ■ | | ■ | | | | | | | | | | | | | | | | | | | | | | | | | | | | | | | | | |
| 17 x 29 x 31.5 | **6G** | ■ | ■ | | ■ | | | | | | | | | | | | | | | | | | | | | | | | | | | | | | | | | |
| 17 x 34.5 x 31.5 | **6I** | ■ | ■ | | ■ | | | | | | | | | | | | | | | | | | | | | | | | | | | | | | | | | |
| 11 x 22 x 41.5 | **7B** | ■ | ■ | | ■ | ■ | | | | ■ | ■ | ■ | ■ | | | | | | | | | | | | | | ■ | | | | ■ | ■ | | | | | | |
| 13 x 24 x 41.5 | **7C** | ■ | ■ | | ■ | ■ | | | | ■ | ■ | ■ | ■ | | | | | | | | | | | | | | ■ | | | | ■ | ■ | | | | | | |
| 15 x 26 x 41.5 | **7D** | ■ | ■ | | ■ | ■ | | | | ■ | ■ | ■ | ■ | | | | | | | | | | | | | | ■ | | | | ■ | ■ | | | | | | ■ |
| 17 x 29 x 41.5 | **7E** | ■ | ■ | | ■ | ■ | | | | ■ | ■ | ■ | ■ | | ■ | | ■ | ■ | ■ | ■ | ■ | ■ | ■ | | ■ | ■ | | | | | ■ | ■ | | ■ | ■ | ■ | | ■ |
| 19 x 32 x 41.5 | **7F** | ■ | ■ | | ■ | ■ | | | | ■ | ■ | ■ | ■ | | ■ | | ■ | ■ | ■ | ■ | ■ | ■ | ■ | | ■ | ■ | | | | | ■ | ■ | | ■ | ■ | ■ | | ■ |
| 20 x 39.5 x 41.5 | **7G** | ■ | ■ | | ■ | ■ | | | | ■ | ■ | ■ | ■ | | ■ | | ■ | ■ | ■ | ■ | ■ | ■ | ■ | | ■ | ■ | | | | | ■ | ■ | | ■ | ■ | ■ | | ■ |
| 24 x 45.5 x 41.5 | **7H** | ■ | ■ | | ■ | ■ | | | | ■ | ■ | ■ | ■ | | ■ | | ■ | ■ | ■ | ■ | ■ | ■ | ■ | | ■ | ■ | | | | | ■ | ■ | | ■ | ■ | ■ | | ■ |
| 31 x 46 x 41.5 | **7I** | ■ | ■ | | ■ | ■ | | | | ■ | ■ | ■ | ■ | | ■ | | ■ | ■ | ■ | ■ | ■ | ■ | ■ | | ■ | ■ | | | | | ■ | ■ | | ■ | ■ | ■ | | ■ |
| 35 x 50 x 41.5 | **7J** | ■ | ■ | | | ■ | | | | ■ | ■ | ■ | | | ■ | | ■ | ■ | ■ | | ■ | ■ | ■ | ■ | | ■ | ■ | | | | | ■ | ■ | | ■ | ■ | ■ | | |
| 40 x 55 x 41.5 | **7K** | ■ | ■ | | | ■ | | | | ■ | ■ | ■ | | | ■ | | ■ | ■ | ■ | | ■ | ■ | ■ | ■ | | ■ | ■ | | | | | ■ | ■ | | ■ | ■ | ■ | | |
| 19 x 31 x 56 | **8D** | ■ | ■ | | ■ | ■ | ■ | ■ | ■ | | ■ | | ■ | ■ | | ■ | | | | | | | | | ■ | | ■ | ■ | ■ | ■ | ■ | | ■ | | | | ■ | |
| 23 x 34 x 56 | **8E** | ■ | ■ | | ■ | ■ | ■ | ■ | ■ | | ■ | | ■ | ■ | | ■ | | | | | | | | | ■ | | ■ | ■ | ■ | ■ | ■ | | ■ | | | | ■ | |
| 27 x 37.5 x 56 | **8H** | ■ | ■ | | ■ | ■ | ■ | ■ | ■ | | ■ | | ■ | ■ | | ■ | | | | | | | | | ■ | | ■ | ■ | ■ | ■ | ■ | | ■ | | | | ■ | |
| 33 x 48 x 56 | **8J** | ■ | ■ | | ■ | ■ | ■ | ■ | ■ | | ■ | | ■ | ■ | | ■ | | | | | | | | | ■ | | ■ | ■ | ■ | ■ | ■ | | ■ | | | | ■ | |
| 37 x 54 x 56 | **8L** | ■ | ■ | | ■ | ■ | ■ | ■ | ■ | | ■ | | ■ | ■ | | ■ | | | | | | | | | ■ | | ■ | ■ | ■ | ■ | ■ | | ■ | | | | ■ | |

| Version code | | 4A | 4C | 4J | 4L | 4M | 5A | 6A | FS |
|---|---|---|---|---|---|---|---|---|---|
| W x H x L | Size code | A4 | A4.2 | A4.7 | A4.9 | A4.10 | A5 | A6 | FS 6.3 |
| 11 x 21 x 26.5 | **5I** | | | | | | | | ■ |
| 11 x 21 x 31.5 | **6B** | | | | | | | | ■ |
| 13 x 24 x 31.5 | **6D** | | | | | | | | ■ |
| 15 x 26 x 31.5 | **6F** | | | | ■ | ■ | | | ■ |
| 17 x 29 x 31.5 | **6G** | | | | ■ | ■ | | | ■ |
| 17 x 34.5 x 31.5 | **6I** | | | | ■ | ■ | | | ■ |
| 11 x 22 x 41.5 | **7B** | | | | | | | | ■ |
| 13 x 24 x 41.5 | **7C** | | | | | | | | ■ |
| 15 x 26 x 41.5 | **7D** | ■ | ■ | | | | | | ■ |
| 17 x 29 x 41.5 | **7E** | ■ | ■ | | | | ■ | | ■ |
| 19 x 32 x 41.5 | **7F** | ■ | ■ | | | | ■ | | ■ |
| 20 x 39.5 x 41.5 | **7G** | ■ | ■ | | | | ■ | | ■ |
| 24 x 45.5 x 41.5 | **7H** | ■ | ■ | | | | ■ | | ■ |
| 31 x 46 x 41.5 | **7I** | ■ | ■ | | | | ■ | | ■ |
| 19 x 31 x 56 | **8D** | ■ | | ■ | | | ■ | | ■ |
| 23 x 34 x 56 | **8E** | ■ | | ■ | | | ■ | ■ | ■ |
| 27 x 37.5 x 56 | **8H** | ■ | | ■ | | | ■ | ■ | ■ |
| 33 x 48 x 56 | **8J** | ■ | | ■ | | | ■ | ■ | ■ |
| 37 x 54 x 56 | **8L** | ■ | | ■ | | | ■ | ■ | ■ |

Possible connecting respective plate versions - depending on box size.

* Processing notification:
Processing should be done within 3 month after manufacturing.

11.14

# Recommendation for Processing and Application of Through-Hole Capacitors

## Soldering Process

Internal temperature of the capacitor must be kept as follows:

| | | |
|---|---|---|
| Polyester: | preheating: | $T_{max.} \leqslant 125°$ C |
| | soldering: | $T_{max.} \leqslant 135°$ C |
| Polypropylene: | preheating: | $T_{max.} \leqslant 100°$ C |
| | soldering: | $T_{max.} \leqslant 110°$ C |

**Single wave soldering**
Soldering bath temperature: T < 260° C
Dwell time: t < 5 sec

**Double wave soldering**
Soldering bath temperature: T < 260° C
Dwell time: Σt < 5 sec

Due to different soldering processes and heat requirements the graphs are to be regarded as a recommendation only.

**Wave soldering**

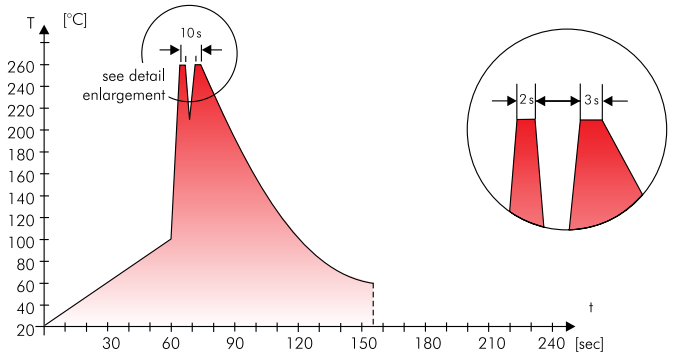


Typical temperature/time graph for double wave soldering

# WIMA Quality and Environmental Philosophy

## ISO 9001:2008 Certification

ISO 9001:2008 is an international basic standard of quality assurance systems for all branches of industry. The approval according to ISO 9001:2008 of our factories by the VDE inspectorate certifies that organisation, equipment and monitoring of quality assurance in our factories correspond to internationally recognized standards.

## WIMA WPCS

The WIMA Process Control System (WPCS) is a quality surveillance and optimization system developed by WIMA. WPCS is a major part of the quality-oriented WIMA production. Points of application of WPCS during production process:

- **incoming material inspection**
- **metallization**
- **film inspection**
- **schoopage**
- **pre-healing**
- **pin attachment**
- **cast resin preparation/ encapsulation**
- **100% final inspection**
- **Testing as per customer requirements**

## WIMA Environmental Policy

All WIMA capacitors, irrespective of whether through-hole devices or SMD, are made of environmentally friendly materials. Neither during manufacture nor in the product itself any toxic substances are used, e.g.

- **Lead**
- **PCB**
- **CFC**
- **Hydrocarbon chloride**
- **Chromium 6+**
- **PBB/PBDE**
- **Arsenic**
- **Cadmium**
- **Mercury**
- **etc.**

We merely use pure, recyclable materials for packing our components, such as:

- **carton**
- **cardboard**
- **adhesive tape made of paper**
- **polystyrene**

We almost completely refrain from using packing materials such as:

- **foamed polystyrene (Styropor®)**
- **adhesive tapes made of plastic**
- **metal clips**

## RoHS Compliance

According to the RoHS Directive 2011/65/EU certain hazardous substances like e.g. lead, cadmium, mercury must not be used any longer in electronic equipment as of July 1st, 2006. For the sake of the environment WIMA has refraind from using such substances since years already.

WIMA Kondensatoren sind bleifrei konform RoHS 2011/65/EU

WIMA capacitors are lead free in accordance with RoHS 2011/65/EU

Tape for lead-free WIMA capacitors

## DIN EN ISO 14001:2004

WIMA's environmental management has been established in accordance with the guidelines of DIN EN ISO 14001:2004 to optimize the production processes with regard to energy and resources.

# Typical Dimensions for Taping Configuration

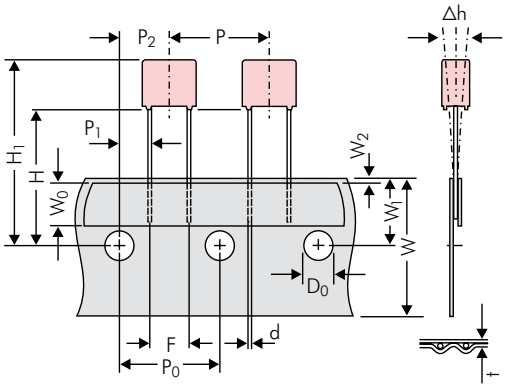


Diagram 1:
PCM 2.5/5/7.5mm

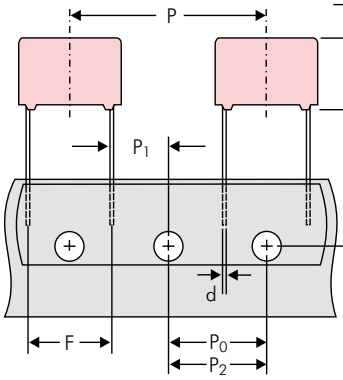


Diagram 2: PCM 10/15 mm

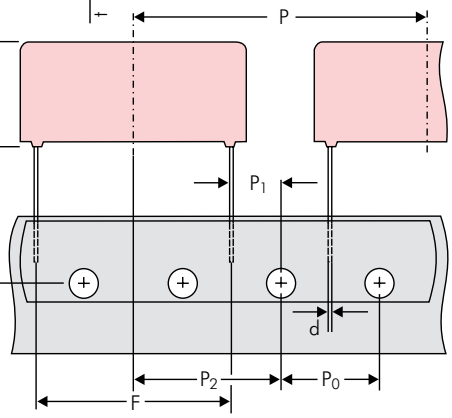


Diagram 3: PCM 22.5 and 27.5*mm
*PCM 27.5 taping possible with two feed holes between components

| Designation | Symbol | Dimensions for Radial Taping | | | | | | |
|---|---|---|---|---|---|---|---|---|
| | | **PCM 2.5 taping** | **PCM 5 taping** | **PCM 7.5 taping** | **PCM 10 taping*** | **PCM 15 taping*** | **PCM 22.5 taping** | **PCM 27.5 taping** |
| Carrier tape width | W | 18.0 ±0.5 | 18.0 ±0.5 | 18.0 ±0.5 | 18.0 ±0.5 | 18.0 ±0.5 | 18.0 ±0.5 | 18.0 ±0.5 |
| Hold-down tape width | $W_0$ | 6.0 for hot-sealing adhesive tape | 6.0 for hot-sealing adhesive tape | 12.0 for hot-sealing adhesive tape | 12.0 for hot-sealing adhesive tape | 12.0 for hot-sealing adhesive tape | 12.0 for hot-sealing adhesive tape | 12.0 for hot-sealing adhesive tape |
| Hole position | $W_1$ | 9.0 ±0.5 | 9.0 ±0.5 | 9.0 ±0.5 | 9.0 ±0.5 | 9.0 ±0.5 | 9.0 ±0.5 | 9.0 ±0.5 |
| Hold-down tape position | $W_2$ | 0.5 to 3.0 max. | 0.5 to 3.0 max. | 0.5 to 3.0 max. | 0.5 to 3.0 max. | 0.5 to 3.0 max. | 0.5 to 3.0 max. | 0.5 to 3.0 max. |
| Feed hole diameter | $D_0$ | 4.0 ±0.2 | 4.0 ±0.2 | 4.0 ±0.2 | 4.0 ±0.2 | 4.0 ±0.2 | 4.0 ±0.2 | 4.0 ±0.2 |
| Pitch of component | P | 12.7 ±1.0 | 12.7 ±1.0 | 12.7 ±1.0 | 25.4 ±1.0 | 25.4 ±1.0 | 38.1 ±1.5 | *38.1 ±1.5 or 50.8 ±1.5 |
| Feed hole pitch | $P_0$ | 12.7 ±0.3 cumulative pitch error max. 1.0 mm/20 pitch | 12.7 ±0.3 cumulative pitch error max. 1.0 mm/20 pitch | 12.7 ±0.3 cumulative pitch error max. 1.0 mm/20 pitch | 12.7 ±0.3 cumulative pitch error max. 1.0 mm/20 pitch | 12.7 ±0.3 cumulative pitch error max. 1.0 mm/20 pitch | 12.7 ±0.3 cumulative pitch error max. 1.0 mm/20 pitch | 12.7 ±0.3 cumulative pitch error max. 1.0 mm/20 pitch |
| Feed hole centre to pin | $P_1$ | 5.1 ±0.5 | 3.85 ±0.7 | 2.6 ±0.7 | 7.7 ±0.7 | 5.2 ±0.7 | 7.8 ±0.7 | 5.3 ±0.7 |
| Hole centre to component centre | $P_2$ | 6.35 ±1.3 | 6.35 ±1.3 | 6.35 ±1.3 | 12.7 ±1.3 | 12.7 ±1.3 | 19.05 ±1.3 | 19.05 ±1.3 |
| Feed hole centre to bottom edge of the component | H | 16.5 ±0.3<br>18.5 ±0.5 | 16.5 ±0.3<br>18.5 ±0.5 | 16.5 ±0.5<br>18.5 ±0.5 | 16.5 ±0.5<br>18.5 ±0.5 | 16.5 ±0.5<br>18.5 ±0.5 | 16.5 ±0.5<br>18.5 ±0.5 | 16.5 ±0.5<br>18.5 ±0.5 |
| Feed hole centre to top edge of the component | $H_1$ | $H+H_{component} < H_1$ 32.25 max. | $H+H_{component} < H_1$ 32.25 max. | $H+H_{component} < H_1$ 24.5 to 31.5 | $H+H_{component} < H_1$ 25.0 to 31.5 | $H+H_{component} < H_1$ 26.0 to 37.0 | $H+H_{component} < H_1$ 30.0 to 43.0 | $H+H_{component} < H_1$ 35.0 to 45.0 |
| Pin spacing at upper edge of carrier tape | F | 2.5 ±0.5 | $5.0^{+0.8}_{-0.2}$ | 7.5 ±0.8 | 10.0 ±0.8 | 15 ±0.8 | 22.5 ±0.8 | 27.5 ±0.8 |
| Pin diameter | d | 0.4 ±0.05 | 0.5 ±0.05 | •0.5 ±0.05 or $0.6^{+0.06}_{-0.05}$ | •0.5 ±0.05 or $0.6^{+0.06}_{-0.05}$ | $0.8^{+0.08}_{-0.05}$ | $0.8^{+0.08}_{-0.05}$ | $0.8^{+0.08}_{-0.05}$ |
| Component alignment | Δh | ± 2.0 max. | ± 2.0 max. | ± 3.0 max. | ± 3.0 max. | ± 3.0 max. | ± 3.0 max. | ± 3.0 max. |
| Total tape thickness | t | 0.7 ±0.2 | 0.7 ±0.2 | 0.7 ±0.2 | 0.7 ±0.2 | 0.7 ±0.2 | 0.7 ±0.2 | 0.7 ±0.2 |
| Package (see also page 141) | | ROLL/AMMO | | AMMO | | | | |
| | | REEL ø 360 max. ø 30 ±1 B 52 ±2 / 58 ±2 } depending on comp. dimensions | | REEL ø 360 max. ø 30 ±1 B 52 ±2 / 58 ±2 / 66 ±2 or REEL ø 500 max. ø 25 ±1 B 54 ±2 / 60 ±2 / 68 ±2 } depending on PCM and component dimensions | | | | |
| Unit | | see details page 142. | | | | | | |

Dims in mm.

- • Diameter of pins see General Data.
- * PCM 10 and PCM 15 can be crimped to PCM 7.5.
  Position of components according to PCM 7.5 (sketch 1). $P_0$ = 12.7 or 15.0 is possible

Please clarify customer-specific deviations with the manufacturer.

11.14

# Types of Tape Packaging of Capacitors for Automatic Radial Insertion

## ROLL Packaging

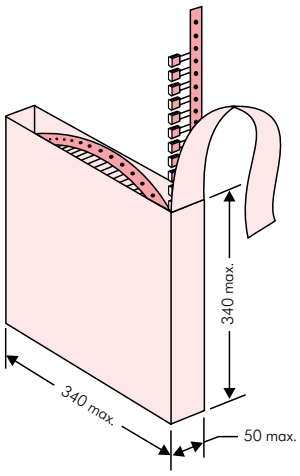


## AMMO Packaging

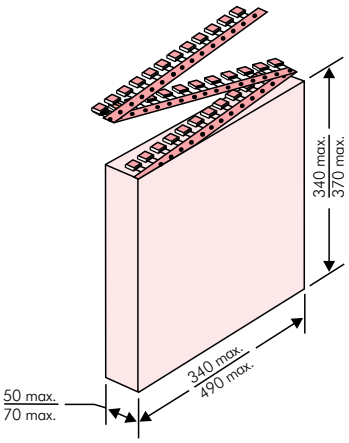


## REEL Packaging

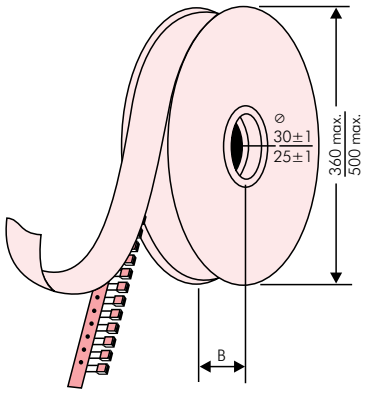


# BAR CODE (Labelling)

Labelling of package units in plain text and with alphanumerical Bar Code

Scanner decoding of

- WIMA supplier number
- Customer's P/O number
- Customer's part number
- WIMA confirmation number
- WIMA part number
- Lot number
- Date code
- Quantity

In addition part description of

– article
– capacitance value
– rated voltage
– dimensions
– capacitance tolerance
– packing

as well as gross weight and customer's name are indicated in plain text.

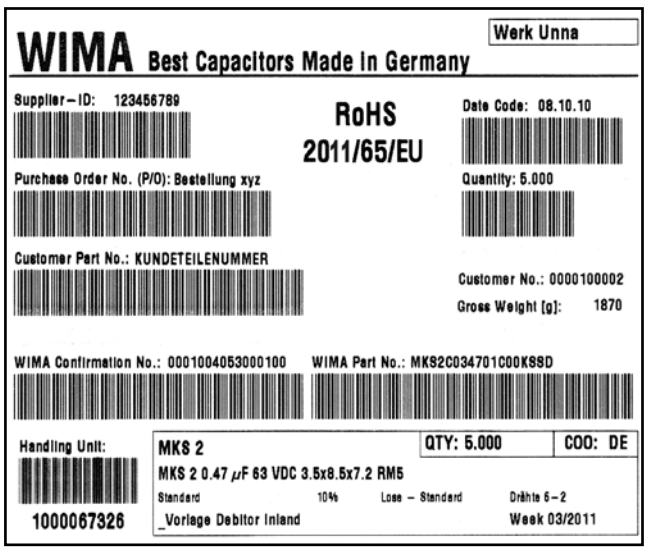


BARCODE „Code 39"

# Packing Quantities for Capacitors with Radial Pins in PCM 2.5 mm to 22.5 mm

| PCM | Size | | | | pcs. per packing unit | | | | | | | | | | |
|---|---|---|---|---|---|---|---|---|---|---|---|---|---|---|---|
| | | | | | bulk | ROLL | | REEL | | | | AMMO | | | |
| | | | | | | | | ø 360 | | ø 500 | | 340 × 340 | | 490 × 370 | |
| | | | | | | H16.5 | H18.5 | H16.5 | H18.5 | H16.5 | H18.5 | H16.5 | H18.5 | H16.5 | H18.5 |
| | W | H | L | Codes | S | N | O | F | I | H | J | A | C | B | D |
| **2.5 mm** | 2.5 | 7 | 4.6 | **0B** | 5000 | 2200 | | 2500 | | – | | 2800 | | – | |
| | 3 | 7.5 | 4.6 | **0C** | 5000 | 2000 | | 2300 | | – | | 2300 | | – | |
| | 3.8 | 8.5 | 4.6 | **0D** | 5000 | 1500 | | 1800 | | – | | 1800 | | – | |
| | 4.6 | 9 | 4.6 | **0E** | 5000 | 1200 | | 1500 | | – | | 1500 | | – | |
| | 5.5 | 10 | 4.6 | **0F** | 5000 | 900 | | 1200 | | – | | 1200 | | – | |
| **5 mm** | 2.5 | 6.5 | 7.2 | **1A** | 5000 | 2200 | | 2500 | | – | | 2800 | | – | |
| | 3 | 7.5 | 7.2 | **1B** | 5000 | 2000 | | 2300 | | – | | 2300 | | – | |
| | 3.5 | 8.5 | 7.2 | **1C** | 5000 | 1600 | | 2000 | | – | | 2000 | | – | |
| | 4.5 | 6 | 7.2 | **1D** | 6000 | 1300 | | 1500 | | – | | 1500 | | – | |
| | 4.5 | 9.5 | 7.2 | **1E** | 4000 | 1300 | | 1500 | | – | | 1500 | | – | |
| | 5 | 10 | 7.2 | **1F** | 3500 | 1100 | | 1400 | | – | | 1400 | | – | |
| | 5.5 | 7 | 7.2 | **1G** | 4000 | 1000 | | 1200 | | – | | 1200 | | – | |
| | 5.5 | 11.5 | 7.2 | **1H** | 2500 | 1000 | | 1200 | | – | | 1200 | | – | |
| | 6.5 | 8 | 7.2 | **1I** | 2500 | 800 | | 1000 | | – | | 1000 | | – | |
| | 7.2 | 8.5 | 7.2 | **1J** | 2500 | 700 | | 1000 | | – | | 1000 | | – | |
| | 7.2 | 13 | 7.2 | **1K** | 2000 | 700 | | 950 | | – | | 1000 | | – | |
| | 8.5 | 10 | 7.2 | **1L** | 2000 | 600 | | 800 | | – | | 800 | | – | |
| | 8.5 | 14 | 7.2 | **1M** | 1500 | 600 | | 800 | | – | | 800 | | – | |
| | 11 | 16 | 7.2 | **1N** | 1000 | 500 | | 600 | | – | | 400 | | – | |
| **7.5 mm** | 2.5 | 7 | 10 | **2A** | 5000 | – | | 2500 | | 4400 | | 2500 | | – | |
| | 3 | 8.5 | 10 | **2B** | 5000 | – | | 2200 | | 4300 | | 2300 | | 4150 | |
| | 4 | 9 | 10 | **2C** | 4000 | – | | 1700 | | 3200 | | 1700 | | 3100 | |
| | 4.5 | 9.5 | 10.3 | **2D** | 3500 | – | | 1500 | | 2900 | | 1400 | | 2800 | |
| | 5 | 10.5 | 10.3 | **2E** | 3000 | – | | 1300 | | 2500 | | 1300 | | – | |
| | 5.7 | 12.5 | 10.3 | **2F** | 2000 | – | | 1000 | | 2200 | | 1100 | | – | |
| | 7.2 | 12.5 | 10.3 | **2G** | 1500 | – | | 900 | | 1800 | | 1000 | | – | |
| **10 mm** | 3 | 9 | 13 | **3A** | 3000 | – | | 1100 | | 2200 | | – | | 1900 | |
| | 4 | 8.5 | 13.5 | **FA** | 3000 | – | | 900 | | 1600 | | – | | 1450 | |
| | 4 | 9 | 13 | **3C** | 3000 | – | | 900 | | 1600 | | – | | 1450 | |
| | 4 | 9.5 | 13 | **3D** | 3000 | – | | 900 | | 1600 | | – | | 1400 | |
| | 5 | 10 | 13.5 | **FB** | 2000 | – | | 700 | | 1300 | | – | | 1200 | |
| | 5 | 11 | 13 | **3F** | 3000 | – | | 700 | | 1300 | | – | | 1200 | |
| | 6 | 12 | 13 | **3G** | 2400 | – | | 550 | | 1100 | | – | | 1000 | |
| | 6 | 12.5 | 13 | **3H** | 2400 | – | | 550 | | 1100 | | – | | 1000 | |
| | 8 | 12 | 13 | **3I** | 2000 | – | | 400 | | 800 | | – | | 740 | |
| **15 mm** | 5 | 11 | 18 | **4B** | 2400 | – | | 600 | | 1200 | | – | | 1150 | |
| | 5 | 13 | 19 | **FC** | 1000 | – | | 600 | | 1200 | | – | | 1200 | |
| | 6 | 12.5 | 18 | **4C** | 2000 | – | | 500 | | 1000 | | – | | 1000 | |
| | 6 | 14 | 19 | **FD** | 1000 | – | | 500 | | 1000 | | – | | 1000 | |
| | 7 | 14 | 18 | **4D** | 1600 | – | | 450 | | 900 | | – | | 850 | |
| | 7 | 15 | 19 | **FE** | 1000 | – | | 450 | | 900 | | – | | 850 | |
| | 8 | 15 | 18 | **4F** | 1200 | – | | 400 | | 800 | | – | | 740 | |
| | 8 | 17 | 19 | **FF** | 500 | – | | 400 | | 800 | | – | | 740 | |
| | 9 | 14 | 18 | **4H** | 1200 | – | | 350 | | 700 | | – | | 650 | |
| | 9 | 16 | 18 | **4J** | 900 | – | | 350 | | 700 | | – | | 650 | |
| | 10 | 18 | 19 | **FG** | 500 | – | | 300 | | 650 | | – | | 590 | |
| | 11 | 14 | 18 | **4M** | 1000 | – | | 300 | | 600 | | – | | 540 | |
| **22.5 mm** | 5 | 14 | 26.5 | **5A** | 1200 | – | | – | | 800 | | – | | 770 | |
| | 6 | 15 | 26.5 | **5B** | 1000 | – | | – | | 700 | | – | | 640 | |
| | 7 | 16.5 | 26.5 | **5D** | 760 | – | | – | | 600 | | – | | 550 | |
| | 8 | 20 | 28 | **FH** | 500 | – | | – | | 500 | | – | | 480 | |
| | 8.5 | 18.5 | 26.5 | **5F** | 500 | – | | – | | 480 | | – | | 450 | |
| | 10 | 22 | 28 | **FI** | 540* | – | | – | | 420 | | – | | 380 | |
| | 10.5 | 19 | 26.5 | **5G** | 680* | – | | – | | 400 | | – | | 360 | |
| | 10.5 | 20.5 | 26.5 | **5H** | 680* | – | | – | | 400 | | – | | 360 | |
| | 11 | 21 | 26.5 | **5I** | 680* | – | | – | | 380 | | – | | 350 | |
| | 12 | 24 | 28 | **FJ** | 450* | – | | – | | 350 | | – | | 310 | |

* TPS (Tray-Packing-System). Plate versions may have different packing units. Samples and pre-production needs on request.

Moulded versions.

Rights reserved to amend design data without prior notification.

# Packing Quantities for Capacitors with Radial Pins in PCM 27.5 mm to 52.5 mm

| PCM | Size | | | | pcs. per packing unit | | | | | | | | | | |
|---|---|---|---|---|---|---|---|---|---|---|---|---|---|---|---|
| | | | | | bulk | ROLL | | REEL | | | | AMMO | | | |
| | | | | | | | | ø 360 | | ø 500 | | 340 × 340 | | 490 × 370 | |
| | | | | | | H16.5 | H18.5 | H16.5 | H18.5 | H16.5 | H18.5 | H16.5 | H18.5 | H16.5 | H18.5 |
| | W | H | L | Codes | **S** | **N** | **O** | **F** | **I** | **H** | **J** | **A** | **C** | **B** | **D** |
| **27.5 mm** | 9 | 19 | 31.5 | **6A** | 640* | – | | – | | 460/340* | | – | | 420 | |
| | 11 | 21 | 31.5 | **6B** | 544* | – | | – | | 380/280* | | – | | 350 | |
| | 13 | 24 | 31.5 | **6D** | 448* | – | | – | | 300 | | – | | 290 | |
| | 13 | 25 | 33 | **FK** | 336* | – | | – | | – | | – | | – | |
| | 15 | 26 | 31.5 | **6F** | 384* | – | | – | | 270 | | – | | 250 | |
| | 15 | 26 | 33 | **FL** | 288* | – | | – | | – | | – | | – | |
| | 17 | 29 | 31.5 | **6G** | 176* | – | | – | | – | | – | | – | |
| | 17 | 34.5 | 31.5 | **6I** | 176* | – | | – | | – | | – | | – | |
| | 20 | 32 | 33 | **FM** | 216* | – | | – | | – | | – | | – | |
| | 20 | 39.5 | 31.5 | **6J** | 144* | – | | – | | – | | – | | – | |
| **37.5 mm** | 9 | 19 | 41.5 | **7A** | 480* | – | | – | | – | | – | | – | |
| | 11 | 22 | 41.5 | **7B** | 408* | – | | – | | – | | – | | – | |
| | 13 | 24 | 41.5 | **7C** | 252* | – | | – | | – | | – | | – | |
| | 15 | 26 | 41.5 | **7D** | 144* | – | | – | | – | | – | | – | |
| | 17 | 29 | 41.5 | **7E** | 132* | – | | – | | – | | – | | – | |
| | 19 | 32 | 41.5 | **7F** | 108* | – | | – | | – | | – | | – | |
| | 20 | 39.5 | 41.5 | **7G** | 108* | – | | – | | – | | – | | – | |
| | 24 | 45.5 | 41.5 | **7H** | 84* | – | | – | | – | | – | | – | |
| | 27 | 15 | 41.5 | **7M** | 100* | | | | | | | | | | |
| | 31 | 46 | 41.5 | **7I** | 72* | – | | – | | – | | – | | – | |
| | 35 | 50 | 41.5 | **7J** | 35* | – | | – | | – | | – | | – | |
| | 40 | 55 | 41.5 | **7K** | 28* | – | | – | | – | | – | | – | |
| **48.5 mm** | 19 | 31 | 56 | **8D** | 50* | – | | – | | – | | – | | – | |
| | 23 | 34 | 56 | **8E** | 72* | – | | – | | – | | – | | – | |
| | 27 | 37.5 | 56 | **8H** | 60* | – | | – | | – | | – | | – | |
| | 33 | 48 | 56 | **8J** | 48* | – | | – | | – | | – | | – | |
| | 37 | 54 | 56 | **8L** | 25* | – | | – | | – | | – | | – | |
| **52.5 mm** | 35 | 50 | 57 | **9F** | 25* | – | | – | | – | | – | | – | |
| | 45 | 55 | 57 | **9H** | 20* | – | | – | | – | | – | | – | |
| | 45 | 65 | 57 | **9J** | 20* | – | | – | | – | | – | | – | |

* for 2-inch transport pitches.

* TPS (Tray-Packing-System). Plate versions may have different packing units. Samples and pre-production needs on request.

Moulded versions.

Rights reserved to amend design data without prior notification.

# WIMA Part Number System

A WIMA part number consists of 18 digits and is composed as follows:

Field 1 - 4: Type description
Field 5 - 6: Rated voltage
Field 7 - 10: Capacitance
Field 11 - 12: Size and PCM
Field 13 - 14: Version code (e.g. Snubber versions)
Field 15: Capacitance tolerance
Field 16: Packing
Field 17 - 18: Pin length (untaped)

| 1 | 2 | 3 | 4 | 5 | 6 | 7 | 8 | 9 | 10 | 11 | 12 | 13 | 14 | 15 | 16 | 17 | 18 |
|---|---|---|---|---|---|---|---|---|---|---|---|---|---|---|---|---|---|
| **M** | **K** | **S** | **2** | **C** | **0** | **2** | **1** | **0** | **0** | **1** | **A** | **0** | **0** | **M** | **S** | **S** | **D** |
| MKS 2 | | | | 63 VDC | | 0.01 µF | | | | 2.5x6.5x7.2 | | - | | 20% | bulk | 6 -2 | |

**Type description:**

| | |
|---|---|
| SMD-PET | = SMDT |
| SMD-PEN | = SMDN |
| SMD-PPS | = SMDI |
| FKP 02 | = FKP0 |
| MKS 02 | = MKS0 |
| FKS 2 | = FKS2 |
| FKP 2 | = FKP2 |
| MKS 2 | = MKS2 |
| MKP 2 | = MKP2 |
| FKS 3 | = FKS3 |
| FKP 3 | = FKP3 |
| MKS 4 | = MKS4 |
| MKP 4 | = MKP4 |
| MKP 10 | = MKP1 |
| FKP 4 | = FKP4 |
| FKP 1 | = FKP1 |
| MKP-X2 | = MKX2 |
| MKP-X2 R | = MKXR |
| MKP-X1 R | = MKX1 |
| MKP-Y2 | = MKY2 |
| MP 3-X2 | = MPX2 |
| MP 3-X1 | = MPX1 |
| MP 3-Y2 | = MPY2 |
| MP 3R-Y2 | = MPRY |
| Snubber MKP | = SNMP |
| Snubber FKP | = SNFP |
| GTO MKP | = GTOM |
| DC-LINK MKP 3 | = DCP3 |
| DC-LINK MKP 4 | = DCP4 |
| DC-LINK MKP 4S | = DCPS |
| DC-LINK MKP 5 | = DCP5 |
| DC-LINK MKP 6 | = DCP6 |
| DC-LINK HC | = DCHC |

**Rated voltage:**

| | |
|---|---|
| 50 VDC | = B0 |
| 63 VDC | = C0 |
| 100 VDC | = D0 |
| 250 VDC | = F0 |
| 400 VDC | = G0 |
| 450 VDC | = H0 |
| 600 VDC | = I0 |
| 630 VDC | = J0 |
| 700 VDC | = K0 |
| 800 VDC | = L0 |
| 850 VDC | = M0 |
| 900 VDC | = N0 |
| 1000 VDC | = O1 |
| 1100 VDC | = P0 |
| 1200 VDC | = Q0 |
| 1250 VDC | = R0 |
| 1500 VDC | = S0 |
| 1600 VDC | = T0 |
| 2000 VDC | = U0 |
| 2500 VDC | = V0 |
| 3000 VDC | = W0 |
| 4000 VDC | = X0 |
| 6000 VDC | = Y0 |
| 250 VAC | = 0W |
| 275 VAC | = 1W |
| 300 VAC | = 2W |
| 305 VAC | = AW |
| 400 VAC | = 3W |
| 440 VAC | = 4W |
| 500 VAC | = 5W |
| ... | |

**Capacitance:**

| | |
|---|---|
| 22 pF | = 0022 |
| 47 pF | = 0047 |
| 100 pF | = 0100 |
| 150 pF | = 0150 |
| 220 pF | = 0220 |
| 330 pF | = 0330 |
| 470 pF | = 0470 |
| 680 pF | = 0680 |
| 1000 pF | = 1100 |
| 1500 pF | = 1150 |
| 2200 pF | = 1220 |
| 3300 pF | = 1330 |
| 4700 pF | = 1470 |
| 6800 pF | = 1680 |
| 0.01 µF | = 2100 |
| 0.022 µF | = 2220 |
| 0.047 µF | = 2470 |
| 0.1 µF | = 3100 |
| 0.22 µF | = 3220 |
| 0.47 µF | = 3470 |
| 1 µF | = 4100 |
| 2.2 µF | = 4220 |
| 4.7 µF | = 4470 |
| 10 µF | = 5100 |
| 22 µF | = 5220 |
| 47 µF | = 5470 |
| 100 µF | = 6100 |
| 220 µF | = 6220 |
| 1000 µF | = 7100 |
| 1500 µF | = 7150 |
| ... | |

**Size:**

| | |
|---|---|
| 4.8x3.3x3 Size 1812 | = KA |
| 4.8x3.3x4 Size 1812 | = KB |
| 5.7x5.1x3.5 Size 2220 | = QA |
| 5.7x5.1x4.5 Size 2220 | = QB |
| 7.2x6.1x3 Size 2824 | = TA |
| 7.2x6.1x5 Size 2824 | = TB |
| 10.2x7.6x5 Size 4030 | = VA |
| 12.7x10.2x6 Size 5040 | = XA |
| 15.3x13.7x7 Size 6054 | = YA |
| 2.5x7x4.6 PCM 2.5 | = 0B |
| 3x7.5x4.6 PCM 2.5 | = 0C |
| 2.5x6.5x7.2 PCM 5 | = 1A |
| 3x7.5x7.2 PCM 5 | = 1B |
| 2.5x7x10 PCM 7.5 | = 2A |
| 3x8.5x10 PCM 7.5 | = 2B |
| 3x9x13 PCM 10 | = 3A |
| 4x9x13 PCM 10 | = 3C |
| 5x11x18 PCM 15 | = 4B |
| 6x12.5x18 PCM 15 | = 4C |
| 5x14x26.5 PCM 22.5 | = 5A |
| 6x15x26.5 PCM 22.5 | = 5B |
| 9x19x31.5 PCM 27.5 | = 6A |
| 11x21x31.5 PCM 27.5 | = 6B |
| 9x19x41.5 PCM 37.5 | = 7A |
| 11x22x41.5 PCM 37.5 | = 7B |
| 19x31x56 PCM 48.5 | = 8D |
| 35x50x57 PCM 52.5 | = 9F |
| ... | |

**Version code:**

| | |
|---|---|
| Standard | = 00 |
| Version A1 | = 1A |
| Version A1.1.1 | = 1B |
| Version A2 | = 2A |
| ... | |

**Tolerance:**

| | |
|---|---|
| ±20% | = M |
| ±10% | = K |
| ±5% | = J |
| ±2.5% | = H |
| ±1% | = E |
| ... | |

**Packing:**

| | |
|---|---|
| AMMO H16.5 340x340 | = A |
| AMMO H16.5 490x370 | = B |
| AMMO H18.5 340x340 | = C |
| AMMO H18.5 490x370 | = D |
| REEL H16.5 360 | = F |
| REEL H16.5 500 | = H |
| REEL H18.5 360 | = I |
| REEL H18.5 500 | = J |
| ROLL H16.5 | = N |
| ROLL H18.5 | = O |
| BLISTER W12 180 | = P |
| BLISTER W12 330 | = Q |
| BLISTER W16 330 | = R |
| BLISTER W24 330 | = T |
| Bulk/TPS Standard | = S |
| ... | |

**Pin length (untaped)**

| | |
|---|---|
| 3.5 ±0.5 | = C9 |
| 6 -2 | = SD |
| 16 ±1 | = P1 |
| ... | |

The data on this page is not complete and serves only to explain the part number system. Part number information is listed on the pages of the respective WIMA range.

11.14