DATALOGIC™

*This product is covered by one or more of the following patents.*
*European Patent 851,211 B1; 1,111,690 B1; 1,148,346 B1; 1,209,487 B1.*
*Italian Patent IT 1,321,772.*

# S50-Mx SERIES

## INSTRUCTION MANUAL

## CONTROLS

**OUTPUT LED (S50-Mx…A00/B01/C01/C10/C21/E01/F01/T01)**
The yellow LED ON indicates that the N.O. (normally open) output status is closed.

**STABILITY LED (S50-Mx…B01/C01/C21/E01/F01)**
The green LED ON indicates that the received signal has a reserve greater than 30% compared to the output switching value.

**POWER ON LED (S50-Mx…G00)**
The green LED indicates that the sensor is operating.

**TRIMMER (S50-Mx…B01/C01/C21/E01/F01/T01)**
The trimmer can be used to adjust sensitivity; the operating distance increases turning the trimmer clockwise.

**WARNING:** *The trimmer rotation is limited to 270° by a mechanical stop. Do not apply excessive torque when adjusting (max 40 Nmm).*

## INSTALLATION

The sensor can be fixed by means of the M18x1 threaded body through a ∅ 18 mm hole, using the two CH.24 nuts enclosed (22 Nm maximum tightening torque).
Wide range of accessories available: various orientable fixing brackets ease the sensor positioning (please refer to the accessories listed in the general catalogue).
The operating distance is measured from the front surface of the sensor lens.
*C/D models*: To improve the detection, the object has to be moved closer or further away from the front surface of the sensor lens.

In case of lateral translation, the object must move as indicated in the figure.

## CONNECTIONS

The connections are compliant to the EN 60947-5-2 standard.

| | | | | | |
|---|---|---|---|---|---|
| BROWN | 1 | + 10 … 30 Vdc | BROWN | 1 | + 10 … 30 Vdc |
| WHITE | 2 | N.C. OUTPUT | WHITE | 2 | TEST + |
| BLACK | 4 | N.O. OUTPUT | BLACK | 4 | TEST - |
| BLUE | 3 | – 0 V | BLUE | 3 | – 0 V |

**S50-Mx…G00**

**M12 CONNECTOR**

## DIMENSIONS

**AXIAL VERSION**

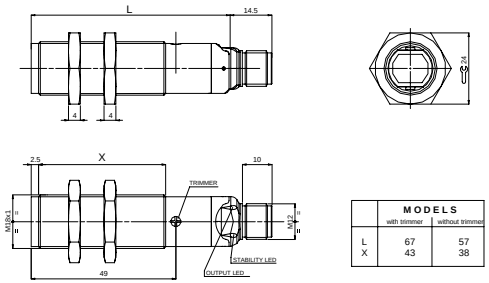


| MODELS | with trimmer | without trimmer |
|---|---|---|
| L | 67 | 57 |
| X | 43 | 38 |

**RADIAL VERSION**

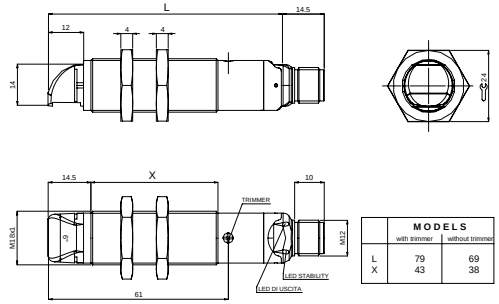


| MODELS | with trimmer | without trimmer |
|---|---|---|
| L | 79 | 69 |
| X | 43 | 38 |

mm

**FIBRE OPTIC VERSION**

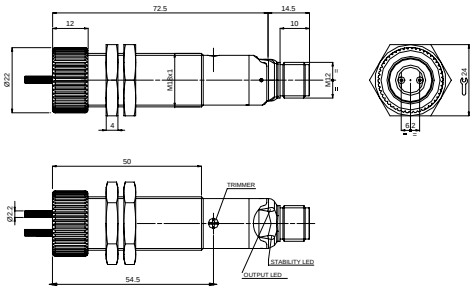


**CABLE VERSION**

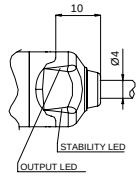


## TECHNICAL DATA

| | S50-MA AXIAL VERSION | S50-MR RADIAL VERSION |
|---|---|---|
| Power supply: | 10 … 30 Vdc (limit values) | |
| Ripple: | 2 Vpp max. | |
| Current consumption (output current excluded): | 35 mA max. | |
| Outputs: | N.O. and N.C.; PNP or NPN (short-circuit protection) | |
| Output current: | 100 mA max. | |
| Output saturation voltage: | 2 V max. | |
| Response time: | 0.5 ms (2 ms mod.F01/G00) | |
| Switching frequency: | 1 kHz (250 Hz mod.F01/G00) | |
| Indicators: | OUTPUT LED (YELLOW) excluding mod.G00<br>STABILITY LED (GREEN) (mod.B01/C01/C21/E01/F01)<br>POWER ON LED (GREEN) (mod.G00) | |
| Setting: | sensitivity trimmer (mod.B01/C01/C21/E01/F01/T01) | |
| Operating temperature: | -25 … 55 °C | |
| Storage temperature: | -25 … 70 °C | |
| Dielectric strength: | 500 Vac / 1 min. between electronic parts and housing | |
| Insulation resistance: | >20 MΩ / 500 Vdc, between electronic parts and housing | |
| Operating distance (typical values): | A00: 0.1…4 m on R2<br>B01: 0.1…3.5 m on R2<br>C01: 0…60 cm<br>C10: 0…10 cm<br>C21: 0…35 cm<br>D00: 0.5…10 cm<br>F01/G00: 0…25 m<br>E01: 30 mm with OF-42 / 100 mm with OF-43<br>T01: 0.1…1 m on R2 | B01: 0.1…2 m on R2<br>C01: 0…35 cm<br>C10: 0…8 cm<br>D00: 0…8 cm<br>F01/G00: 0…20 m<br>T01: 0.1…1 m on R2 |
| Emission type: | red (630 nm) (mod.D00/E01) / red (660 nm) (mod.B01/T01)<br>infrared (880 nm) (mod.A00/C01/C10/C21/G00) | |
| Ambient light rejection: | according to EN 60947-5-2 | |
| Vibrations: | 0.5 mm amplitude, 10 … 55 Hz frequency, for every axis (EN60068-2-6) | |
| Shock resistance: | 11 ms (30 G) 6 shock for every axis (EN60068-2-27) | |
| Housing material: | Nickel-plated brass | |
| Lens material: | PMMA | |
| Mechanical protection: | IP67 Type 1 enclosure | |
| Connections: | 2 m cable ∅ 4 mm / M12 - 4 pole connector | |
| Weight: | 110 g. max. cable vers. / 60 g. max. connector vers. | |

## SETTING

**Setting of S50-Mx…A00**
Position the sensor and reflector on opposite sides.
Find the points where the yellow LED (OUT) is switched ON and OFF in both vertical and horizontal positions, and fix the sensor in the centre between these points.

**Setting of S50-Mx…B01/T01**
Position the sensor and reflector on opposite sides.
Turn the sensitivity trimmer to the maximum position.
Moving the sensor both vertically and horizontally, determine the power on and off points of the yellow LED (OUT) and then mount the sensor in the middle of the points defined. Optimum operation is obtained when the green LED (mod.B01) is ON and the yellow LED is OFF.
*B01 models*: If necessary reduce sensitivity in order to detect very small targets. In order to improve alignment, repeat the procedure detailed above whilst progressively reducing the sensitivity.
*T01 model*: Turn the sensitivity trimmer counterclockwise until the yellow LED turns ON *(pos.A)*.
Turn slowly the trimmer again clockwise until the yellow LED turns OFF *(Operating condition, pos.B)*.

**Setting of S50-Mx…F01/G00/E01 with OF-43 (P/R fibre-optics)**
Position the sensors (fibre terminals) on opposite sides.
Turn the sensitivity trimmer to maximum: moving the sensor both vertically and horizontally, determine the power on and off points of the yellow LED (OUT) and then mount the sensor in the middle of the points defined. Optimum operation is obtained when the green LED is ON and the yellow LED is OFF (the output function and the relative LEDs are inverted in the E01 model with the OF-43 fibre).
If necessary, reduce sensitivity using the trimmer, in order to detect very small targets. In order to improve alignment, repeat the procedure detailed above whilst progressively reducing the sensitivity.

**Setting of S50-Mx…C01/C21/E01 with OF-42 (proximity fibre)**
Turn the sensitivity trimmer to minimum: the green LED is ON, the yellow LED is OFF. Position the target to detect in front of the sensor or of the fibre terminals. Turn the sensitivity trimmer clockwise until the yellow LED turns ON *(Target detected state, pos.A)*. Remove the target, the yellow LED turns OFF. Turn the sensitivity trimmer clockwise until the yellow LED turns ON *(Background detected state, pos.B)*.
The trimmer reaches maximum if the background is not detected.
Turn the trimmer to the intermediate position C, between the two positions A and B. The green LED must be ON.

**Setting of S50-Mx…C10/D00**
The operating distance range of these sensors is factory preset: please consider this feature when positioning.

## TEST FUNCTION (S50-Mx…G00)

The TEST+ and TEST- inputs can be used to inhibit the emitter and verify that the system is correctly operating.
The receiver output should switch when the test is activated while the beam is uninterrupted.
The inputs activating voltage range is 10 … 30 Vdc.

**DECLARATION OF CONFORMITY**
We DATALOGIC AUTOMATION declare under our sole responsibility that these products are conform to the 2004/108/CE and successive amendments.

**WARRANTY**
DATALOGIC AUTOMATION warrants its products to be free from defects.
DATALOGIC AUTOMATION will repair or replace, free of charge, any product found to be defective during the warranty period of 36 months from the manufacturing date.
This warranty does not cover damage or liability deriving from the improper application of DATALOGIC AUTOMATION products.

**DATALOGIC AUTOMATION**
Via Lavino 265 - 40050 Monte S.Pietro - Bologna – Italy
Tel: +39 051 6765611 - Fax: +39 051 6759324
www.automation.datalogic.com e-mail:info.automation.it@datalogic.com

DATALOGIC AUTOMATION cares for the environment: 100% recycled paper.
DATALOGIC AUTOMATION reserves the right to make modifications and improvements without prior notification.
*Datalogic and the Datalogic logo are registered trademarks of Datalogic S.p.A. in many countries, including the U.S.A. and the E.U.*

**826001326 Rev.I**
*© Copyright Datalogic 2007-2011*