Smart Laser Sensors

E3NC

CSM_E3NC_DS_E_3_1

Ideal for Applications That Cannot Be Handled with Fiber Sensors or Photoelectric Sensors

- A wide variety of easy-to-use Laser Photoelectric Sensor Heads.
  - Coaxial Retro-reflective Models (E3NC-LH03).
  - Long-distance, variable spot, Diffuse-reflective Models (E3NC-LH02)
  - Small-spot (0.1 mm dia.), Limited-reflective Models (E3NC-LH01).
  - CMOS Reflective Models (E3NC-SH series).
- Smart Tuning to achieve stable detection with easy setup.
- White on black display characters for high visibility.
- Robot cables for reliable operation in harsh environments.

Refer to the *Safety Precautions* on page 14.

For the most recent information on models that have been certified for safety standards, refer to your OMRON website.

Features

Retro-reflective Models: E3NC-LH03

- Maximum sensing distance of 8 m.
- Stable detection of many types of workpieces.
- Stable detection of highly transparent films.

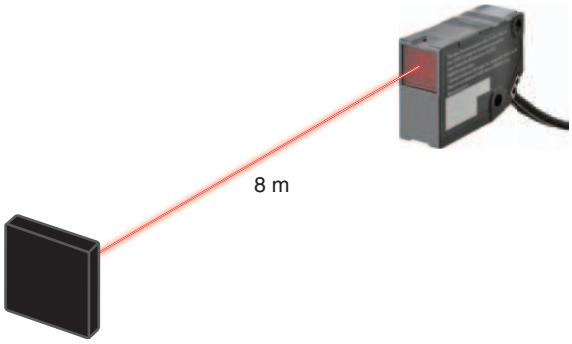

Diffuse-reflective Models: E3NC-LH02 PAT.P

- Long-distance detection at up to 1.2 m.
- Spot can be adjusted to the workpiece or application.

CMOS Laser, Reflective Models: E3NC-SH250H/SH250/SH100

- Stable detection even for different workpiece colors and materials.
- Stable detection for inclined Head installation and different workpiece shapes.

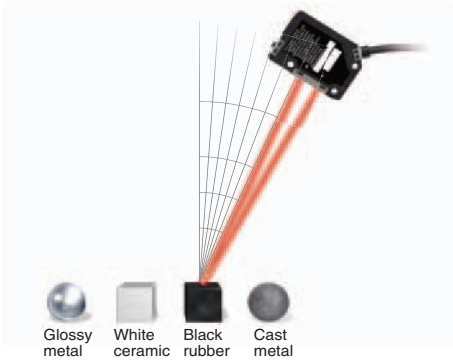

Amplifier Units

- Same shape as Fiber Amplifier Units plus easy operation.
- Smart Tuning with one button.

Ordering Information

Sensor Heads: E3NC-L Compact Laser Sensor Series (Dimensions ➜ page 17)

Sensing method	Appearance	Beam shape	Sensing distance	Laser class	Cable length	Model
Coaxial Retro-reflective with MSR function		Spot	8 m *	Class 1	2 m	**E3NC-LH03 2M**
					5 m	**E3NC-LH03 5M**
Diffuse-reflective		Variable spot	1.2 m		2 m	**E3NC-LH02 2M**
					5 m	**E3NC-LH02 5M**
Limited-reflective		Spot	70±15 mm		2 m	**E3NC-LH01 2M**
					5 m	**E3NC-LH01 5M**

* These values apply when an E39-R21, E39-R22, E39-RS10, or E39-RS11 Reflector is used. A Reflector is not included. Purchase a Reflector separately to match the intended use of the Sensor.

Note: Only an E3NC-LA□□ Amplifier Unit can be connected.

Amplifier Units: E3NC-L Compact Laser Sensor Series (Dimensions ➜ page 19)

Connecting method	Appearance	Inputs/outputs	Model	
			NPN output	PNP output
Pre-wired (2 m)		2 outputs + 1 input	**E3NC-LA21 2M**	**E3NC-LA51 2M**
Wire-saving Connector		1 output + 1 input	**E3NC-LA7**	**E3NC-LA9**
M8 Connector		1 output + 1 input	**E3NC-LA24**	**E3NC-LA54**
Connector for Sensor Communications Unit *		---	**E3NC-LA0**	

* A Sensor Communications Unit is required if you want to use the Amplifier Unit on a network.

Note: Only an E3NC-LH□□ Sensor Head can be connected.

Sensor Heads: E3NC-S Ultra-compact CMOS Laser Sensor Series (Dimensions ➜ page 18)

Sensing method	Appearance	Beam shape	Measurement range	Laser class	Cable length	Model
Distance-settable		Spot	35 to 250 mm	Class 2	2 m	**E3NC-SH250H 2M**
				Class 1	2 m	**E3NC-SH250 2M**
			35 to 100 mm		2 m	**E3NC-SH100 2M**

Note: Only an E3NC-SA□□ Amplifier Unit can be connected.

Amplifier Units: E3NC-S Ultra-compact CMOS Laser Sensor Series (Dimensions ➜ page 19)

Connecting method	Appearance	Inputs/outputs	Model	
			NPN output	PNP output
Pre-wired (2 m)		2 outputs + 1 input	**E3NC-SA21 2M**	**E3NC-SA51 2M**
Wire-saving Connector		1 output + 1 input	**E3NC-SA7**	**E3NC-SA9**
M8 Connector		1 output + 1 input	**E3NC-SA24**	**E3NC-SA54**
Connector for Sensor Communications Unit *		---	**E3NC-SA0**	

* A Sensor Communications Unit is required if you want to use the Amplifier Unit on a network.
Note: Only an E3NC-SH□□ or E3NC-SH□□H Sensor Head can be connected.

Accessories (Sold Separately)

Sensor Head Accessories

Reflectors for Retro-reflective Sensors (Dimensions ➜ page 21)

A Reflector is not provided with the Sensor Head. It must be ordered separately as required.

Applicable Sensor Head	Appearance	Model	Quantity
E3NC-LH03		**E39-R21**	1
		**E39-R22**	
		**E39-RS10**	
		**E39-RS11**	

Lens Attachments for Sensor Heads (Dimensions ➜ page 21)

A Lens Attachment is not provided with the Sensor Head. It must be ordered separately as required.

Applicable Sensor Head	Appearance	Model	Quantity
E3NC-LH03		**E39-P51**	1
E3NC-LH02		**E39-P52**	

Note: You can combine the Lens Attachment with an applicable Sensor Head to create a line beam.

Sensor Head Mounting Brackets (Dimensions ➜ page 22)

A Mounting Bracket is not provided with the Sensor Head. It must be ordered separately as required.

Applicable Sensor Head	Appearance	Model	Quantity	Contents
E3NC-LH03		**E39-L190**	1	Mounting Bracket: 1 Nut plate: 1 Phillips screws (M3×18): 2
E3NC-LH02		**E39-L185**		
E3NC-LH01		**E39-L186**		
E3NC-SH250H E3NC-SH250 E3NC-SH100		**E39-L187**		
		**E39-L188**		

Amplifier Unit Accessories

Wire-saving Connectors (Required for models for Wire-saving Connectors.) (Dimensions ➜ page 26)

Connectors are not provided with the Amplifier Unit and must be ordered separately. *Protective stickers are provided.

Type	Appearance	Cable length	No. of conductors	Model
Master Connector		2 m	4	**E3X-CN21**
Slave Connector			2	**E3X-CN22**

Sensor I/O Connectors (Required for models for M8 Connectors.) (Dimensions ➜ page 26)

Connectors are not provided with the Amplifier Unit and must be ordered separately.

Size	Cable	Appearance		Cable type		Model
M8	Standard cable	Straight		2 m	4-wire	**XS3F-M421-402-A**
				5 m		**XS3F-M421-405-A**
		L-shaped		2 m		**XS3F-M422-402-A**
				5 m		**XS3F-M422-405-A**

Note: For details, refer to XS3 which can be accessed from your OMRON website.

Amplifier Unit Mounting Bracket (Dimensions ➜ page 27)

A Mounting Bracket is not provided with the Amplifier Unit. It must be ordered separately as required.

Appearance	Model	Quantity
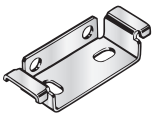	**E39-L143**	1

Note: For details, refer to Mounting Brackets on E39-L/E39-S/E39-R which can be accessed from your OMRON website.

DIN Track (Dimensions ➜ page 27)

A DIN Track is not provided with the Amplifier Unit. It must be ordered separately as required.

Appearance	Type	Model	Quantity
	Shallow type, total length: 1 m	**PFP-100N**	1
	Shallow type, total length: 0.5m	**PFP-50N**	
	Deep type, total length: 1 m	**PFP-100N2**	

End Plate (Dimensions ➜ page 27)

Two End Plates are provided with the Sensor Communications Unit. End Plates are not provided with the Amplifier Unit. They must be ordered separately as required.

Appearance	Model	Quantity
	**PFP-M**	1

Related Products

Sensor Communications Units

Type	Appearance	Model
Sensor Communications Unit for EtherCAT		**E3NW-ECT**
Sensor Communications Unit for CompoNet		**E3NW-CRT**
Sensor Communications Unit for CC-Link		**E3NW-CCL**
Distributed Sensor Unit *		**E3NW-DS**

Refer to your OMRON website for details.
* The Distributed Sensor Unit can be connected to any of the Sensor Communications Units.

EtherCAT® is a registered trademark and patented technology, licensed by Beckhoff Automation GmbH, Germany.
CompoNet is a registered trademark of the ODVA.
CC-Link is a registered trademark of Mitsubishi Electric Corporation. The trademark is managed by the CC-Link Partner Association.

Ratings and Specifications

Compact Laser Sensors: E3NC-L

Sensor Heads

Item / Sensing method			Coaxial Retro-reflective with MSR function		Diffuse-reflective		Limited-reflective
Model			E3NC-LH03	E3NC-LH03+ E39-P51	E3NC-LH02	E3NC-LH02+ E39-P52	E3NC-LH01
Light source (wavelength)*1			Visible semiconductor laser diode (660 nm), 1.35 mW (average output: 315 µW) (JIS Class 1, IEC/EN Class 1, and FDA Class 1)				
Sensing distance*2	Giga-power mode (GIGA)		8 m	0.5 m	1,200 mm	1,000 mm	70±15 mm
	Standard mode (Stnd)		6 m		750 mm	600 mm	
	High-speed mode (HS)		3.5 m		250 mm	200 mm	
	Super-high-speed mode (SHS)		2 m		200 mm	150 mm	
Beam shape			Spot	Line	Spot	Line	Spot
Beam size*3			Approx. 2 mm dia. at 1 m	Line length: Approx. 25 mm at 250 mm Line length: Approx. 50 mm at 500 mm	Approx. 0.8 mm dia. at 300 mm	Line length: Approx. 45 mm at 500 mm Line length: Approx. 100 mm at 1,000 mm	Approx. 0.1 mm dia. at 70 mm
Differential distance*4			---		10% of sensing distance max.		
Indicators			OUT indicator (orange) and STABILITY indicator (green)				
Ambient illumination (Receiver side)			Incandescent lamp: 10,000 lx max., Sunlight: 20,000 lx max.				
Ambient temperature range			Operating: −10 to 55°C; Storage: −25 to 70°C (with no icing or condensation)				
Ambient humidity range			Operating and storage: 35% to 85% (with no condensation)				
Insulation resistance			20 MΩ min. (at 500 VDC)				
Dielectric strength			1,000 VAC at 50/60 Hz for 1 min				
Vibration resistance (destruction)			10 to 55 Hz with a 1.5-mm double amplitude or 100 m/s² for 2 hours each in X, Y, and Z directions				
Shock resistance (destruction)			500 m/s² for 3 times each in X, Y, and Z directions				
Degree of protection			IEC IP67*5		IEC IP65 (E3NC-LH02: Applies only when adjuster is locked.)*5		
Connecting method			Pre-wired connector (standard length: 2 m)				
Materials	Sensor Head	Case	Polybutylene terephthalate (PBT)				
		Lens	Methacrylic resin (PMMA)				
		Cable	Vinyl chloride (PVC)				
	Lens Attachment	Case	---	ABS	---	ABS	---
		Lens	---	Methacrylic resin (PMMA)	---	Methacrylic resin (PMMA)	---
Weight (packed state/Sensor Head only)	Models with 2-m cable		Approx. 120 g/approx. 70 g		Approx. 115 g/approx. 65 g		
	Models with 5-m cable		Approx. 180 g/approx. 130 g		Approx. 175 g/approx. 125 g		
	Lens Attachment		---	Approx. 25 g/ approx. 2 g	---	Approx. 25 g/ approx. 2 g	---
Accessories			Instruction Manual				

*1. These Sensors excluding the E3NC-LH03 are classified as Class 1 laser devices under IEC 60825-1 and the regulations of Laser Notice No. 50 for FDA certification. CDRH (Center for Devices and Radiological Health) registration has been completed. (Accession Number: 1220690)
Application to the CDRH (Center for Devices and Radiological Health) is scheduled for the E3NC-LH03.
*2. The values were measured using the OMRON standard sensing object (white paper) for the E3NC-LH01, E3NC-LH02, and E3NC-LH02 + E39-P52.
The values for the E3NC-LH03, and E3NC-LH03 + E39-P51 apply when an E39-R21, E39-R22, E39-RS10, or E39-RS11 Reflector is used. Other Reflectors are not recommended.
*3. Defined at the $1/e^2$ (13.5%) of the central intensity at the measurement distance.
Measurement may be influenced if there is light leakage outside the defined region and the surroundings of the target object have a high reflectance in comparison to the target object.
*4. Measured at the rated sensing distance.
*5. The E39-P5□ contains a packing to prevent entry of foreign matter. The degree of protection between the E3NC-LH□□ and E39-P5□ is not specified.

Amplifier Units

Item		Type	Standard models			Model for Sensor Communications Unit
		NPN output	E3NC-LA21	E3NC-LA7	E3NC-LA24	E3NC-LA0
		PNP output	E3NC-LA51	E3NC-LA9	E3NC-LA54	
		Connecting method	Pre-wired	Wire-saving Connector	M8 Connector	Connector for Sensor Communications Unit
Inputs/outputs	Outputs		2 outputs	1 output		--- *1
	External inputs		1 input			
Power supply voltage			10 to 30 VDC, including 10% ripple (p-p)			Supplied from the connector through the Sensor Communications Unit
Power consumption *2			At Power Supply Voltage of 24 VDC Normal mode: 1,560mW max. (Current consumption: 65mA max.) Power saving eco mode: 1,200 mW max. (Current consumption: 50 mA max.)			
Control outputs*3			Load power supply voltage: 30 VDC max., open-collector output Load current: Groups of 1 to 3 Amplifier Units: 100 mA max., Groups of 4 to 30 Amplifier Units: 20 mA max. (Residual voltage: At load current of less than 10 mA: 1 V max. At load current of 10 to 100 mA: 2 V max.) OFF current: 0.1 mA max.			---
External inputs			Refer to *4.			---
Indicators			7-segment displays (Sub digital display: green, Main digital display: white) Display direction: Switchable between normal and reversed. OUT indicator (orange), L/D indicator (orange), ST indicator (blue), DPC indicator (green), and OUT selection indicator (orange, only on models with 2 outputs)			
Protection circuits			Power supply reverse polarity protection, output short-circuit protection, and output reverse polarity protection			Power supply reverse polarity protection and output short-circuit protection
Response time	Super-high-speed mode (SHS)*5		Operate or reset: 80 µs			
	High-speed mode (HS)		Operate or reset: 250 µs			
	Standard mode (Stnd)		Operate or reset: 1 ms			
	Giga-power mode (GIGA)		Operate or reset: 16 ms			
Sensitivity adjustment			Smart Tuning (2-point tuning, full auto tuning, position tuning, maximum sensitivity tuning, power tuning, or percentage tuning (–99% to +99%)), or manual adjustment.			
Maximum connectable Units			30			
No. of Units for mutual interference prevention	Super-high-speed mode (SHS)*5		0			
	High-speed mode (HS)		2			
	Standard mode (Stnd)		2			
	Giga-power mode (GIGA)		4			
Functions	Dynamic power control (DPC)		Provided			
	Timer		Select from timer disabled, OFF-delay, ON-delay, one-shot, or ON-delay + OFF-delay timer: 1 to 9,999 ms			
	Zero reset		Negative values can be displayed. (Threshold value is shifted.)			
	Resetting settings*6		Select from initial reset (factory defaults) or user reset (saved settings).			
	Eco mode		Select from OFF (digital displays lit) or ECO (digital displays not lit).			
	Bank switching		Select from banks 1 to 4.			
	Power tuning		Select from ON or OFF.			
	Output 1		Select from Normal Detection Mode or Area Detection Mode.			
	Output 2		Select from normal detection mode, alarm output mode, or error output mode.	---		Select from normal detection mode, alarm output mode, or error output mode.
	External input		Select from input OFF, tuning, power tuning, laser OFF, zero reset, or bank switching.			---
	Hysteresis width		Select from standard setting or user setting.			

*1. Two sensor outputs are allocated in the programmable logic controller PLC I/O table.
PLC operation via Communications Unit enables reading detected values and changing settings.
*2. At Power Supply Voltage of 10 to 30 VDC.
Normal mode: 1,650 mW max. (Current consumption: 55 mA max. at 30 VDC, 115 mA max. at 10 VDC)
Power saving eco mode: 1,350 mW max. (Current consumption: 45 mA max. at 30 VDC, 80 mA max. at 10 VDC)
*3. The total for both outputs of a model with 2 outputs is 100 mA max. (Residual voltage: Load current of less than 10 mA: 1 V max., Load current of 10 to 100 mA: 2 V max.).
*4. The following details apply to the input.

	Contact input (relay or switch)	Non-contact input (transistor)	Input time*4-1
NPN	ON: Shorted to 0 V (Sourcing current: 1 mA max.). OFF: Open or shorted to Vcc.	ON: 1.5 V max. (Sourcing current: 1 mA max.) OFF: Vcc – 1.5 V to Vcc (Leakage current: 0.1 mA max.)	ON: 9 ms min. OFF: 20 ms min.
PNP	ON: Shorted to Vcc (Sinking current: 3 mA max.). OFF: Open or shorted to 0 V.	ON: Vcc – 1.5 V to Vcc (Sinking current: 3 mA max.) OFF: 1.5 V max. (Leakage current: 0.1 mA max.)	

*4-1.Input time is 25 ms (ON)/(OFF) only when (in tUnE) or (in PtUn) input is selected.
*5. The mutual interference prevention function is disabled if the detection mode is set to super-high-speed mode.
*6. The bank is not reset by the user reset function or saved by the user save function.

Item	Type	Standard models			Model for Sensor Communications Unit
	NPN output	E3NC-LA21	E3NC-LA7	E3NC-LA24	E3NC-LA0
	PNP output	E3NC-LA51	E3NC-LA9	E3NC-LA54	
	Connecting method	Pre-wired	Wire-saving Connector	M8 Connector	Connector for Sensor Communications Unit
Ambient temperature range		Operating: Groups of 1 or 2 Amplifier Units: –25 to 55°C, Groups of 3 to 10 Amplifier Units: –25 to 50°C, Groups of 11 to 16 Amplifier Units: –25 to 45°C, Groups of 17 to 30 Amplifier Units: –25 to 40°C Storage: –30 to 70°C (with no icing or condensation)			Operating: Groups of 1 or 2 Amplifier Units: 0 to 55°C, Groups of 3 to 10 Amplifier Units: 0 to 50°C, Groups of 11 to 16 Amplifier Units: 0 to 45°C, Groups of 17 to 30 Amplifier Units: 0 to 40°C, Storage: –30 to 70°C (with no icing or condensation)
Ambient humidity range		Operating and storage: 35% to 85% (with no condensation)			
Insulation resistance		20 MΩ (at 500 VDC)			
Dielectric strength		1,000 VAC at 50/60 Hz for 1 min			
Vibration resistance (destruction)		10 to 55 Hz with a 1.5-mm double amplitude for 2 hours each in X, Y, and Z directions			
Shock resistance (destruction)		500 m/s^2 for 3 times each in X, Y, and Z directions			150m/s^2 for 3 times each in X, Y, and Z directions
Weight (packed state/Amplifier Unit only)		Approx. 115 g/approx. 75 g	Approx. 60 g/approx. 20 g	Approx. 65 g/approx. 25 g	
Materials	Case	Polycarbonate (PC)			
	Cover	Polycarbonate (PC)			
	Cable	Vinyl chloride (PVC)			
Accessories		Instruction Manual			

Accessories

Reflectors

Item / Model	E39-R21	E39-R22	E39-RS10	E39-RS11
Ambient temperature	Operating: -10 to 55°C; Storage: -25 to 70°C (with no icing or condensation)			
Ambient humidity	Operating/storage: 35% to 85% (with no condensation)			
Vibration resistance (destruction)	10 to 55 Hz with a 1.5-mm double amplitude or 100 m/s^2 for 2 hours each in X, Y, and Z directions			
Shock resistance (destruction)	500 m/s^2 3 times each in X, Y, and Z directions			
Degree of protection	IEC IP67 (E39-R21 and E39-R22 only)			
Materials	Reflective surface: Methacrylic resin (PMMA) Back surface: Polybutylene terephthalate (PBT)		Methacrylic resin (PMMA)	
Weight (packed state/Reflector only)	Approx. 30 g/approx. 5 g	Approx. 35 g/approx. 10 g	Approx. 26 g/approx. 1 g	Approx. 30 g/approx. 5 g
Accessories	Instruction manual			

Ultra-compact CMOS Laser Sensor: E3NC-S

Sensor Heads

Item / Sensing method	Model	Distance-settable		
		E3NC-SH250H	E3NC-SH250	E3NC-SH100
Light source (wavelength)*1		Visible semiconductor laser diode (660 nm), 1 mW (average output: 220 μW) (JIS Class 2, IEC/EN Class 2, and FDA Class 2)	Visible semiconductor laser diode (660 nm), 0.5 mW (average output: 100 μW) (JIS Class 1, IEC/EN Class 1, and FDA Class 1)	
Measurement range		35 to 250 mm (display value: 350 to 2,500)		35 to 100 mm (display value: 350 to 1,000)
Standard detected level difference *2		35 to 180mm: 9 mm 180 to 250 mm: 25 mm		35 to 50 mm: 1.5 mm 50 to 100 mm: 3 mm
Beam size*3		Approx. 1 mm dia. at 250 mm		Approx. 0.5 mm dia. at 100 mm
Indicators		OUT indicator (orange), STABILITY indicator (green), and ST indicator (blue)		
Ambient illumination (Receiver side)		Incandescent lamp: 4,000 lx max., Sunlight: 8,000 lx max.	Incandescent lamp: 2,000 lx max., Sunlight: 4,000 lx max.	Incandescent lamp: 4,000 lx max., Sunlight: 8,000 lx max.
Ambient temperature range		Operating: –10 to 50°C; Storage: –25 to 70°C (with no icing or condensation)		
Ambient humidity range		Operating and storage: 35% to 85% (with no condensation)		
Insulation resistance		20 MΩ min. (at 500 VDC)		
Dielectric strength		1,000 VAC at 50/60 Hz for 1 min		
Vibration resistance (destruction)		10 to 55 Hz with a 1.5-mm double amplitude for 2 hours each in X, Y, and Z directions		
Shock resistance (destruction)		500 m/s^2 3 times each in X, Y, and Z directions		
Degree of protection		IEC IP67		
Connecting method		Pre-wired connector (Standard cable length: 2 m)		
Materials	Case	Polybutylene terephthalate (PBT)		
	Lens	Methacrylic resin (PMMA)		
	Cable	Vinyl chloride (PVC)		
Weight (packed state/Sensor Head only)		Approx. 125 g/approx. 75 g		
Accessories		Instruction Manual, laser warning label (E3NC-SH250H only)		

Note: Incorrect detection may occur outside the measurement range if the object has a high reflection factor.

*1. These Sensors are classified as Class 1 laser devices under IEC 60825-1 and the regulations of Laser Notice No. 50 for FDA certification. CDRH (Center for Devices and Radiological Health) registration has been completed. (Accession Number: 1220691)

*2. The values were measured at the center of the sensing distance using OMRON's standard sensing object (white ceramic).

*3. Beam size: Defined at the 1/e^2 (13.5 %) of the central intensity at the measurement center distance.
Measurement may be influenced if there is light leakage outside the defined region and the surroundings of the target object have a high reflectance in comparison to the target object.
Also, when detecting a workpiece that is smaller than the beam size, a correct value may not be obtained.

Amplifier Units

Item		Type	Standard models			Model for Sensor Communications Unit
		NPN output	E3NC-SA21	E3NC-SA7	E3NC-SA24	E3NC-SA0
		PNP output	E3NC-SA51	E3NC-SA9	E3NC-SA54	
		Connecting method	Pre-wired	Wire-saving Connector	M8 Connector	Connector for Sensor Communications Unit
Inputs/ outputs	Outputs		2 outputs	1 output		--- *1
	External inputs		1 input			
Power supply voltage			10 to 30 VDC, including 10% ripple (p-p)			Supplied from the connector through the Sensor Communications Unit
Power consumption *2			At Power Supply Voltage of 24 VDC Normal mode: 1,920 mW max. (Current consumption: 80 mA max.) Power saving eco mode: 1,680 mW max. (Current consumption: 70 mA max.)			
Control outputs *3			Load power supply voltage: 30 VDC max., open-collector output Load current: Groups of 1 to 3 Amplifier Units: 100 mA max., Groups of 4 to 30 Amplifier Units: 20 mA max. (Residual voltage: At load current of less than 10 mA: 1 V max. At load current of 10 to 100 mA: 2 V max.) OFF current: 0.1 mA max.			---
External inputs			Refer to *4.			
Indicators			7-segment displays (Sub digital display: green, Main digital display: white) Display direction: Switchable between normal and reversed. OUT indicator (orange), L/D indicator (orange), ST indicator (blue), ZERO indicator (green), and OUT selection indicator (orange, only on models with 2 outputs)			
Protection circuits			Power supply reverse polarity protection, output short-circuit protection, and output reverse polarity protection			Power supply reverse polarity protection and output short-circuit protection
Response time	Super-high-speed mode (SHS) *5		Operate or reset: 1.5 ms			
	High-speed mode (HS)		Operate or reset: 5 ms			
	Standard mode (Stnd)		Operate or reset: 10 ms			
	Giga-power mode (GIGA)		Operate or reset: 50 ms			
Sensitivity adjustment			Smart Tuning (2-point tuning, full auto tuning, 1-point tuning, tuning without workpiece, 2-point area tuning, 1-point area tuning, or area tuning without workpiece), or manual adjustment			
Maximum connectable Units			30			
No. of Units for mutual interference prevention	Super-high-speed mode (SHS) *5		0			
	High-speed mode (HS)		2			
	Standard mode (Stnd)		2			
	Giga-power mode (GIGA)		2			
Functions	Timer		Select from timer disabled, OFF-delay, ON-delay, one-shot, or ON-delay + OFF-delay timer: 1 to 9,999 ms			
	Zero reset		Negative values can be displayed. (Threshold value is shifted.)			
	Resetting settings *6		Select from initial reset (factory defaults) or user reset (saved settings).			
	Eco mode		Select from OFF (digital displays lit) or ECO (digital displays not lit).			
	Bank switching		Select from banks 1 to 4.			
	Output 1		Select from Normal detection mode, Area detection mode, or hold mode.			
	Output 2		Select from Normal detection mode or Error output mode.	---		Select from Normal detection mode or Error output mode.
	External input		Select from input OFF, tuning, laser OFF, zero reset, or bank switching.			---
	Keep function *7		Select from ON or OFF.			
	Background suppression*8		Select from ON or OFF.			
	Hysteresis width		Select from standard setting or user setting.			

*1. Two sensor outputs are allocated in the programmable logic controller PLC I/O table.
PLC operation via Communications Unit enables reading detected values and changing settings.
*2. At Power Supply Voltage of 10 to 30 VDC.
Normal mode: 2,250 mW max. (Current consumption: 75 mA max. at 30 VDC, 145 mA max. at 10 VDC)
Power saving eco mode: 1,950 mW max. (Current consumption: 65 mA max. at 30 VDC, 125 mA max. at 10 VDC)
*3. The total for both outputs of a model with 2 outputs is 100 mA max. (Residual voltage: Load current of less than 10 mA: 1 V max., Load current of 10 to 100 mA: 2 V max.).
*4. The following details apply to the input.

	Contact input (relay or switch)	Non-contact input (transistor)	Input time*4-1
NPN	ON: Shorted to 0 V (Sourcing current: 1 mA max.). OFF: Open or shorted to Vcc.	ON: 1.5 V max. (Sourcing current: 1 mA max.) OFF: Vcc – 1.5 V to Vcc (Leakage current: 0.1 mA max.)	ON: 9 ms min. OFF: 20 ms min.
PNP	ON: Shorted to Vcc (Sinking current: 3 mA max.). OFF: Open or shorted to 0 V.	ON: Vcc – 1.5 V to Vcc (Sinking current: 3 mA max.) OFF: 1.5 V max. (Leakage current: 0.1 mA max.)	

*4-1.Input time is 25 ms (ON)/(OFF) only when (in tUnE) input is selected.
*5. The mutual interference prevention function is disabled if the detection mode is set to super-high-speed mode.
*6. The bank is not reset by the user reset function or saved by the user save function.
*7. The output for a measurement error is set. ON: The value of the output from before the measurement error is retained. OFF: The output is turned OFF when a measurement error occurs.
*8. Only the sensing object is detected when tuning.

Item	Type	Standard models			Model for Sensor Communications Unit
	NPN output	E3NC-SA21	E3NC-SA7	E3NC-SA24	E3NC-SA0
	PNP output	E3NC-SA51	E3NC-SA9	E3NC-SA54	
	Connecting method	Pre-wired	Wire-saving Connector	M8 Connector	Connector for Sensor Communications Unit
Ambient temperature range		Operating: Groups of 1 or 2 Amplifier Units: –25 to 55°C, Groups of 3 to 10 Amplifier Units: –25 to 50°C, Groups of 11 to 16 Amplifier Units: –25 to 45°C, Groups of 17 to 30 Amplifier Units: –25 to 40°C Storage: –30 to 70°C (with no icing or condensation)			Operating: Groups of 1 or 2 Amplifier Units: 0 to 55°C, Groups of 3 to 10 Amplifier Units: 0 to 50°C, Groups of 11 to 16 Amplifier Units: 0 to 45°C, Groups of 17 to 30 Amplifier Units: 0 to 40°C Storage: –30 to 70°C (with no icing or condensation)
Ambient humidity range		Operating and storage: 35% to 85% (with no condensation)			
Insulation resistance		20 MΩ (at 500 VDC)			
Dielectric strength		1,000 VAC at 50/60 Hz for 1 min			
Vibration resistance (destruction)		10 to 55 Hz with a 1.5-mm double amplitude for 2 hours each in X, Y, and Z directions			
Shock resistance (destruction)		500 m/s^2 for 3 times each in X, Y, and Z directions			150 m/s^2 for 3 times each in X, Y, and Z directions
Weight (packed state/Amplifier Unit only)		Approx. 115 g/approx. 75 g	Approx. 60 g/approx. 20 g	Approx. 65 g/approx. 25 g	
Materials	**Case**	Polycarbonate (PC)			
	Cover	Polycarbonate (PC)			
	Cable	Vinyl chloride (PVC)			
Accessories		Instruction Manual			

Engineering Data (Reference Value)

Beam Diameter Vs. Distance

Retro-reflective Model
E3NC-LH03

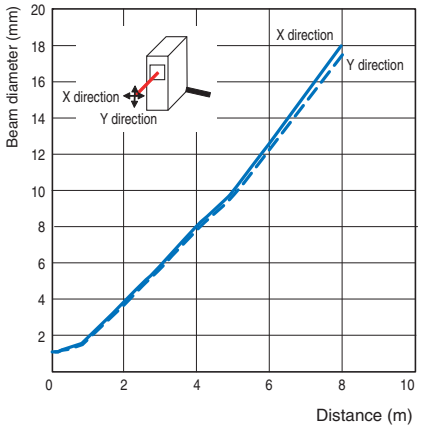

Retro-reflective Model
E3NC-LH03 + E39-P51

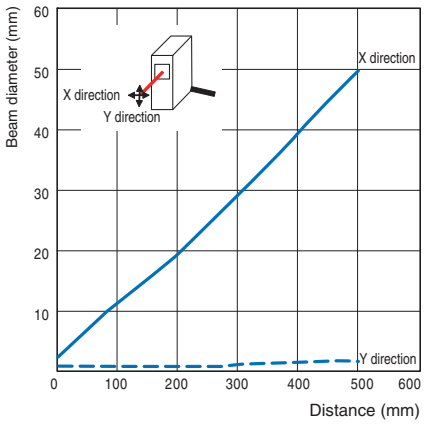

Diffuse-reflective Model
E3NC-LH02

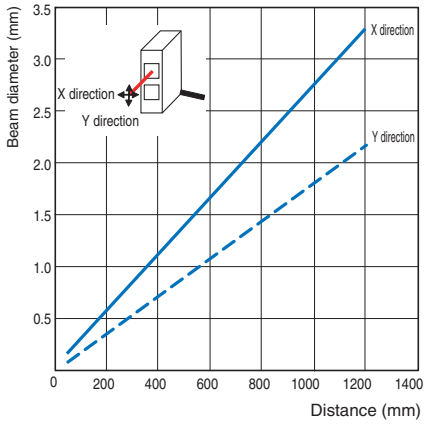

Diffuse-reflective Model
E3NC-LH02 + E39-P52

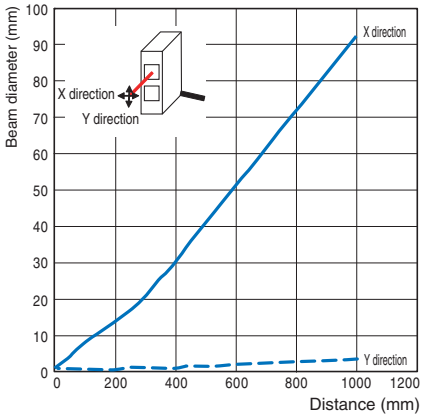

Limited-reflective Model
E3NC-LH01

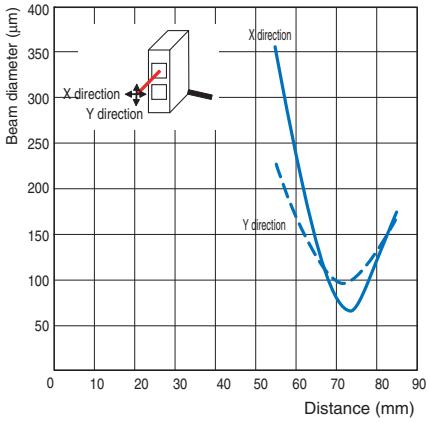

Distance-settable Model
E3NC-SH250/SH250H

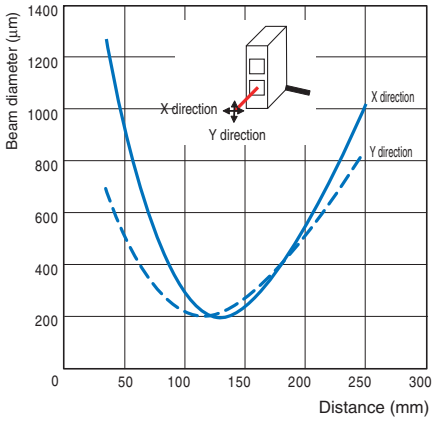

Distance-settable Model
E3NC-SH100

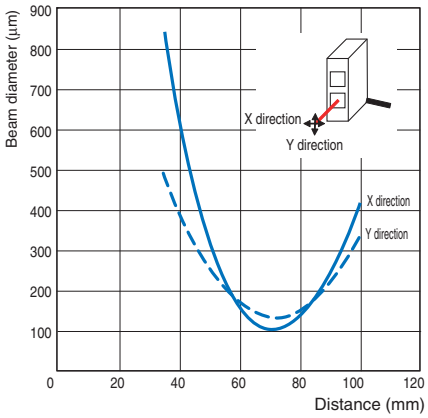

I/O Circuit Diagrams

NPN Output

Model	Operation mode	Timing chart	L/D indicator	Output circuit
E3NC-LA21 E3NC-SA21	Light-ON	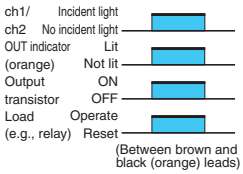	L lit.	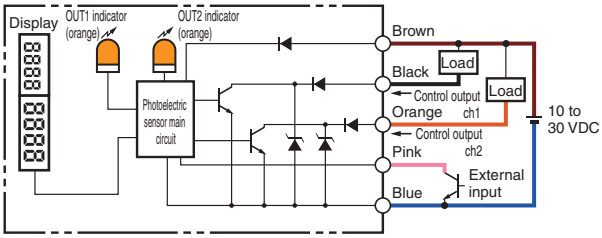
	Dark-ON	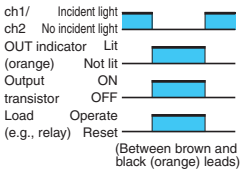	D lit.	
E3NC-LA7 E3NC-LA24 E3NC-SA7 E3NC-SA24	Light-ON	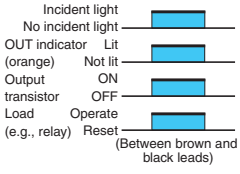	L lit.	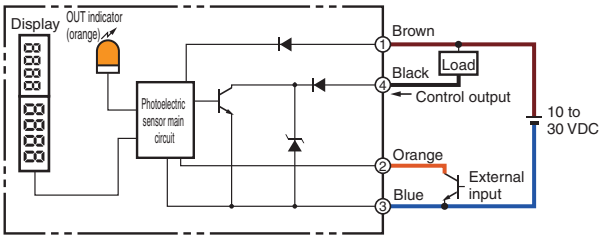
	Dark-ON	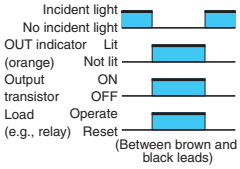	D lit.	

PNP Output

Model	Operation mode	Timing chart	L/D indicator	Output circuit
E3NC-LA51 E3NC-SA51	Light-ON	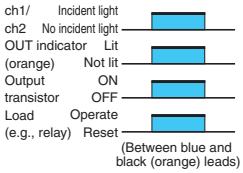	L lit.	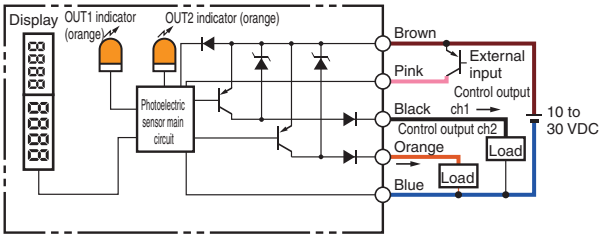
	Dark-ON	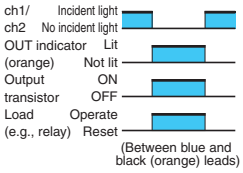	D lit.	
E3NC-LA9 E3NC-LA54 E3NC-SA9 E3NC-SA54	Light-ON	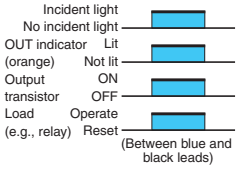	L lit.	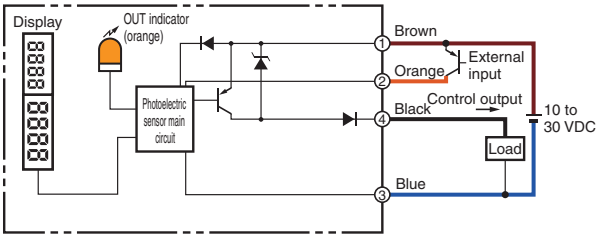
	Dark-ON	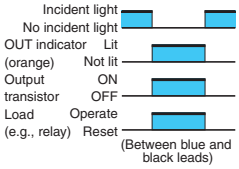	D lit.	

Nomenclature

Compact Laser Sensors

E3NC-LA21/LA51/LA0

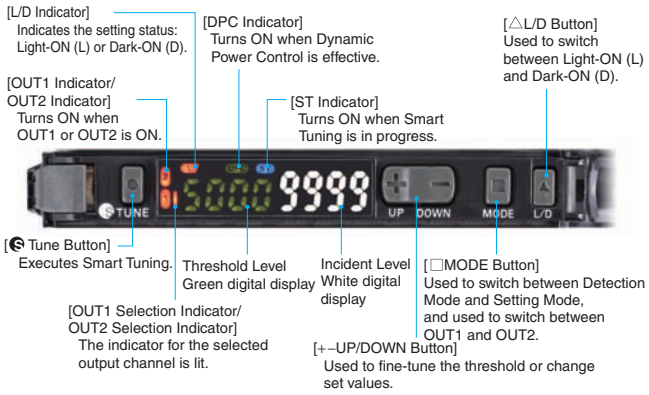

E3NC-LA7/LA9/LA24/LA54

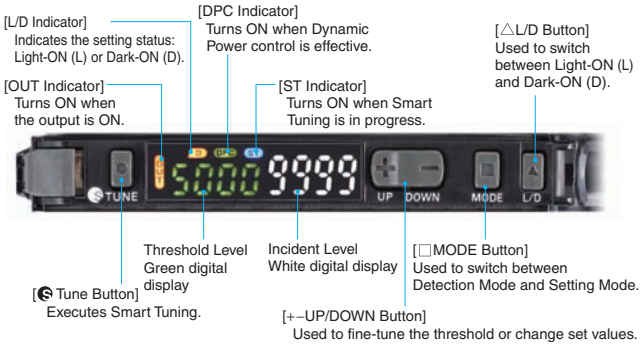

Ultra-compact CMOS Laser Sensors

E3NC-SA21/SA51/SA0

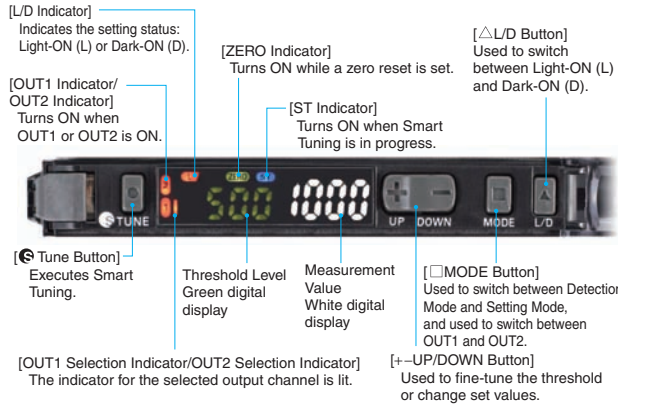

E3NC-SA7/SA9/SA24/SA54

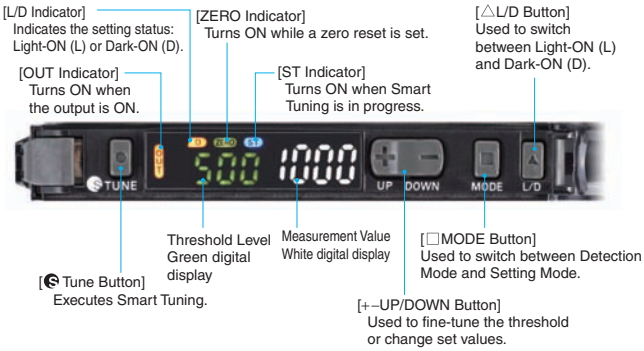

Safety Precautions

To ensure safe operation, be sure to read and follow the Instruction Manual provided with the Sensor.

Indication and Meaning for Safe Use

⚠WARNING	Indicates a potentially hazardous situation which, if not avoided, will result in minor or moderate injury, or may result in serious injury or death. Additionally there may be significant property damage.
Precautions for Safe Use	Supplementary comments on what to do or avoid doing, to use the product safely.
Precautions for Correct Use	Supplementary comments on what to do or avoid doing, to prevent failure to operate, malfunction or undesirable effect on product performance.

Sensor Heads

Laser Safety

Various safety standards regarding laser devices are stipulated in Japan and abroad. When this Sensor Head is used in Japan and when it is assembled in Japan but exported to a foreign country, the safety standards are classified into three cases.

1. When Using the Sensor Head in Japan

JIS C6802 stipulates the safety measures that must be observed by the user for each type of laser equipment.

E3NC-LH□□ Sensor Heads: Class 1
E3NC-SH□□ Sensor Heads: Class 1
E3NC-SH□□H Sensor Heads: Class 2

⚠ WARNING

Do not expose your eyes to the laser beam either directly or indirectly (i.e., after reflection from a mirror or shiny surface). The laser beam has a high power density and exposure may result in loss of sight.

Do not disassemble the Sensor Head. Doing so may cause the laser beam to leak, resulting in a risk of visual impairment.

- The following laser warning label and laser description labels are attached to the sides of the Sensor Heads.

E3NC-LH03

Description Label

Certification Label

E3NC-LH01
/E3NC-LH02

Description Label

Certification Label

E3NC-SH□□

Description Label

Certification Label

E3NC-SH□□H

Laser Warning Label

Certification Label

2. Using in the USA

When using devices in which the Sensor Head is installed in the USA, the devices are subject to FDA (Food and Drug Administration) laser regulations of the USA.

E3NC-LH03:
These Sensor Heads are classified as Class 1 laser devices under IEC/EN 60825-1 and the regulations of Laser Notice No. 50 for this certification. Application to the CDRH (Center for Devices and Radiological Health) is scheduled.

E3NC-LH01, E3NC-LH02:
These Sensor Heads are classified as Class 1 laser devices under IEC/EN 60825-1 and the regulations of Laser Notice No. 50 for this certification. CDRH (Center for Devices and Radiological Health) registration has been completed. (Accession Number: 1220690)

E3NC-SH□□, E3NC-SH□□H:
These Sensor Heads are classified as Class 1 or Class 2 laser devices under IEC/EN 60825-1 and the regulations of Laser Notice No. 50 for this certification. CDRH (Center for Devices and Radiological Health) registration has been completed. (Accession Number: 1220691)

- For countries other than Japan
  Replace the warning label with the corresponding English label (supplied with SH□□H).

3. Using in Europe

E3NC-LH□□, E3NC-SH□□:
These Sensor Heads are classified in Class 1 under EN 60825-1.
E3NC-SH□□H:
These Sensor Heads are classified in Class 2 under EN 60825-1.

Precautions for Safe Use

The following precautions must be observed to ensure safe operation of the Sensor Head.

1. Installation Environment
- Do not use the Sensor Head in an environment where explosive or flammable gas is present.
- To secure the safety of operation and maintenance, do not install the Sensor Head close to high-voltage devices or power devices.

2. Power Supply and Wiring
- Always use an E3NC-LA□□, E3NC-LA0, E3NC-SA□□ or E3NC-SA0 Amplifier Unit. If a different Amplifier Unit is used, damage or fire may occur.
- If you short the cable, reconnect it as specified. If the connections are not correct, damage or fire may occur.
- High-voltage lines and power lines must be wired separately from the Sensor Head. Wiring them together or placing them in the same duct may cause induction, resulting in malfunction or damage.
- Always turn OFF the power supply before connecting or disconnecting the connectors.

3. Installation
- Use screws for installation and tighten the screws securely, but do not exceed the specified tightening torque.
  Specified torque (M3): 0.5 N·m

4. Others
- Never disassemble (including removing labels), repair, modify, deform by pressure, or incinerate the Sensor Head. Do not turn the adjuster on the E3NC-LH02 with a force that is greater than 40 mN·m. Damage or fire may occur.
- Dispose of the Sensor Head as industrial waste.
- If you notice any abnormalities, immediately stop using the Sensor Head, turn OFF the power supply, and contact your OMRON representative.

Precautions for Correct Use

Observe the following precautions to prevent failure to operate, malfunctions, or undesirable effects on Sensor Head performance.

1. Installation Environment
Do not install the Sensor Head in locations subject to the following conditions:
- Ambient temperatures outside of the rated range
- Condensation caused by rapid changes in temperature
- Relative humidity that is not between 35% and 85%
- Corrosive or flammable gas
- Dust, salt, or iron particles
- Direct vibration or shock
- Strong external light interference (such as other laser beams or electric arc-welding machines)
- Direct sunlight or near heaters
- Water, oil, or chemical fumes or spray
- Strong magnetic or electric fields

2. Warming Up
- The circuits will be unstable just after the power supply is turned ON, so measurement values may fluctuate gradually.
- For accurate measurements, allow the product to stand for at least 10 minutes after turning ON the power supply before use. (E3NC-S Series)

3. Maintenance and Inspection
- Always turn OFF the power supply before adjusting or connecting/disconnecting the Sensor Head.
- Do not use thinner, benzene, acetone, or kerosene to clean the Sensor Head.
- If large dust particles or dirt adheres to the filter on the front of the Sensor Head, use a blower brush (such as one used to clean camera lenses) to blow it off. Do not blow the dust particles or dirt with your mouth. To remove dust particles or dirt, wipe it off gently with a soft cloth (such as one for cleaning lenses) moistened with a small amount of alcohol. Do not wipe it off with excessive force. Scratches on the filter may cause errors.

4. Sensing Object
- The Sensor Head cannot accurately measure objects with the following materials and shapes: Transparent objects (with the E3NC-LH03, objects that are extremely transparent), objects with an extremely low reflection ratio, objects smaller than the spot diameter, objects with a large curvature, excessively inclined objects, etc. Also, for long-distance detection, the Sensor may falsely operate if a white object approaches near the Sensor Head (E3NC-LH03).

5. The degree of protection is IP67, but do not use the Sensor Head in water, rain, or outdoors. (E3NC-S Series)

6. A ferrite core is attached to the Sensor Head end of the cable connected to the E3NC-LH03 5M. Do not remove the ferrite core or change its position. Also, do not bend the cable within 12 mm of each end of the ferrite core. Doing so may damage the cable.

Attaching a Lens Attachment (E39-P51 or E39-P52)

1. Check the widths of the slots in the Sensor and the widths of the tabs on the Lens Attachment and attach the Lens Attachment as shown below. (The Lens Attachment must be in the correct orientation, so the widths of the tabs on the Lens Attachment are different on the top and bottom.)

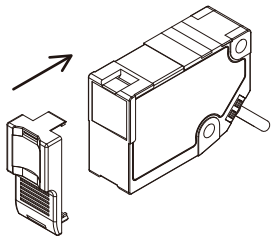

2. After you attach the Lens Attachment, make sure that the tabs are completely engaged in the slots in the Sensor.

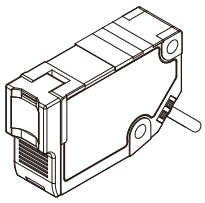

Amplifier Units

⚠ WARNING

This Amplifier Unit is not designed or rated for ensuring safety of persons either directly or indirectly.
Do not use it for such purposes.

Do not use the Amplifier Unit with voltage in excess of the rated voltage.
Excess voltage may result in malfunction or fire.

Never use the Amplifier Unit with an AC power supply.
Otherwise, explosion may result.

Precautions for Safe Use

The following precautions must be observed to ensure safe operation of the Amplifier Unit. Doing so may cause damage or fire.

1. Do not install the Amplifier Unit in the following locations.
   - Locations subject to direct sunlight
   - Locations subject to condensation due to high humidity
   - Locations subject to corrosive gas
   - Locations subject to vibration or mechanical shocks exceeding the rated values
   - Locations subject to exposure to water, oil, chemicals
   - Locations subject to steam
   - Locations subjected to strong magnetic field or electric field
2. Do not use the Amplifier Unit in environments subject to flammable or explosive gases.
3. Do not use the Amplifier Unit in any atmosphere or environment that exceeds the ratings.
4. To secure the safety of operation and maintenance, do not install the Amplifier Unit close to high-voltage devices or power devices.
5. High-voltage lines and power lines must be wired separately from the Amplifier Unit. Wiring them together or placing them in the same duct may cause induction, resulting in malfunction or damage.
6. Do not apply any load exceeding the ratings. Otherwise, damage or fire may result.
7. Do not short the load. Otherwise, damage or fire may result.
8. Connect the load correctly.
9. Do not miswire such as the polarity of the power supply.
10. Do not use the Amplifier Unit if the case is damaged.
11. Burn injury may occur. The Amplifier Unit surface temperature rises depending on application conditions, such as the ambient temperature and the power supply voltage. Use caution when operating or cleaning the Amplifier Unit.
12. When setting the sensor, be sure to check safety such as by stopping the equipment.
13. Be sure to turn off the power supply before connecting or disconnecting wires.
14. Do not attempt to disassemble, repair, or modify the Amplifier Unit in any way.
15. When disposing of the Amplifier Unit, treat it as industrial waste.

Precautions for Correct Use

1. Be sure to mount the unit to the DIN track until it clicks.
2. When using the Amplifier Units with Wire-saving Connectors, attach the protective stickers (provided with E3X-CN-series Connectors) on the unused power pins to prevent electrical shock and short circuiting.
   When using the Amplifier Units with Connectors for Communications Units, attach the protective caps (provided with E3NW-series Sensor Communications Unit).

Amplifier Unit with Wire-saving Connector

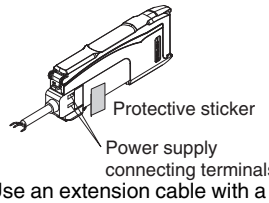

Amplifier Unit with Connector for Sensor Communications Unit

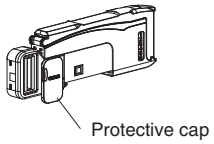

3. Use an extension cable with a minimum thickness of 0.3 mm^2 and less than 100 m long.
4. Do not apply the forces on the cord exceeding the following limits: Pull: 40 N; torque: 0.1 N·m; pressure: 20 N; bending: 29.4 N
5. Do not apply excessive force (9.8 N max.) such as tension, compression or torsion to the connector of the Sensor Head that is fixed to the Amplifier Unit.
6. Always keep the protective cover in place when using the Amplifier Unit. Not doing so may cause malfunction.
7. It may take time until the received light intensity and measured value become stable immediately after the power is turned on depending on use environment.
8. The product is ready to operate 200 ms after the power supply is turned ON.
9. The Mobile Console E3X-MC11, E3X-MC11-SV2 and E3X-MC11-S cannot be connected.
10. The mutual interference prevention function does not work when in combination with E3C/E2C/E3X.
11. If the unit receives excessive sensor light, the mutual interference prevention function may not work properly, resulting in malfunction of the unit. In such case, increase the threshold.
12. Standard models (E3NC-□A21/51/7/9)
    The Sensor Communications Unit E3X-DRT21-S, E3X-CRT, E3X-ECT and E3NW cannot be connected.
    Model for Sensor Communications Unit (E3NC-□A0)
    The Sensor Communications Unit E3NW can be connected.
    E3X-DRT21-S, E3X-CRT, E3X-ECT cannot be connected.
13. If you notice an abnormal condition such as a strange odor, extreme heating of the unit, or smoke immediately stop using the product, turn off the power, and consult your dealer.
14. Do not use thinner, benzene, acetone, and lamp oil for cleaning.

Dimensions

(Unit: mm)
Tolerance class IT16 applies to dimensions in this data sheet unless otherwise specified.

Sensor Heads

Retro-reflective Model
E3NC-LH03

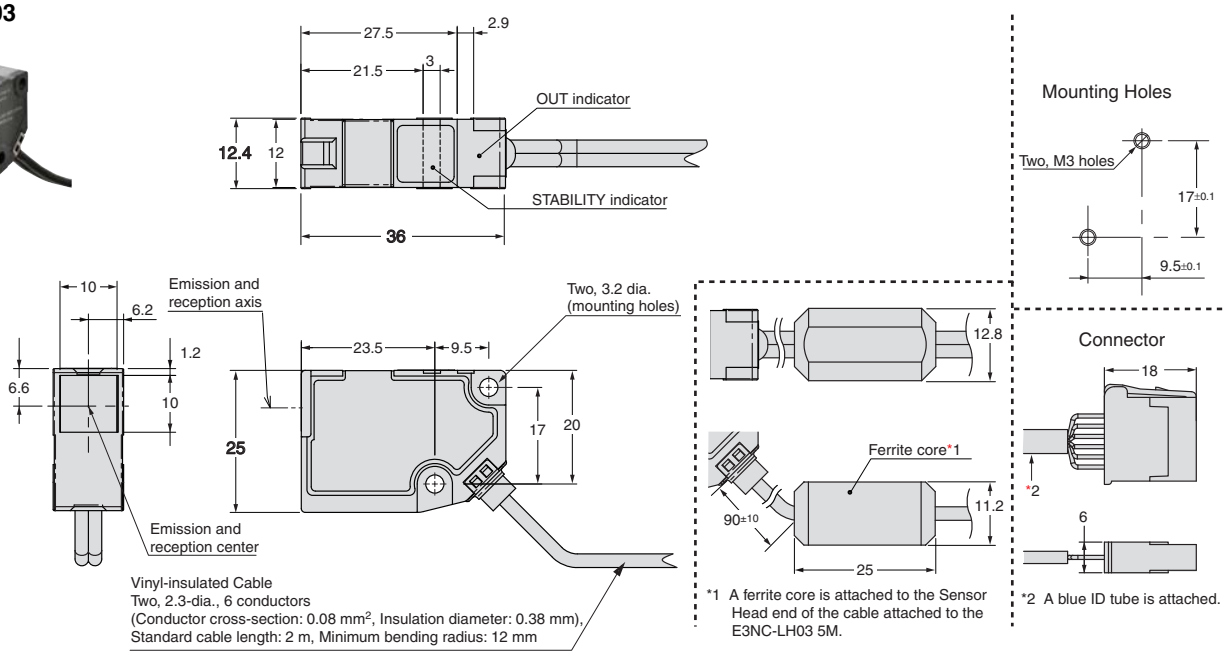

*1 A ferrite core is attached to the Sensor Head end of the cable attached to the E3NC-LH03 5M.

*2 A blue ID tube is attached.

Diffuse-reflective Model
E3NC-LH02

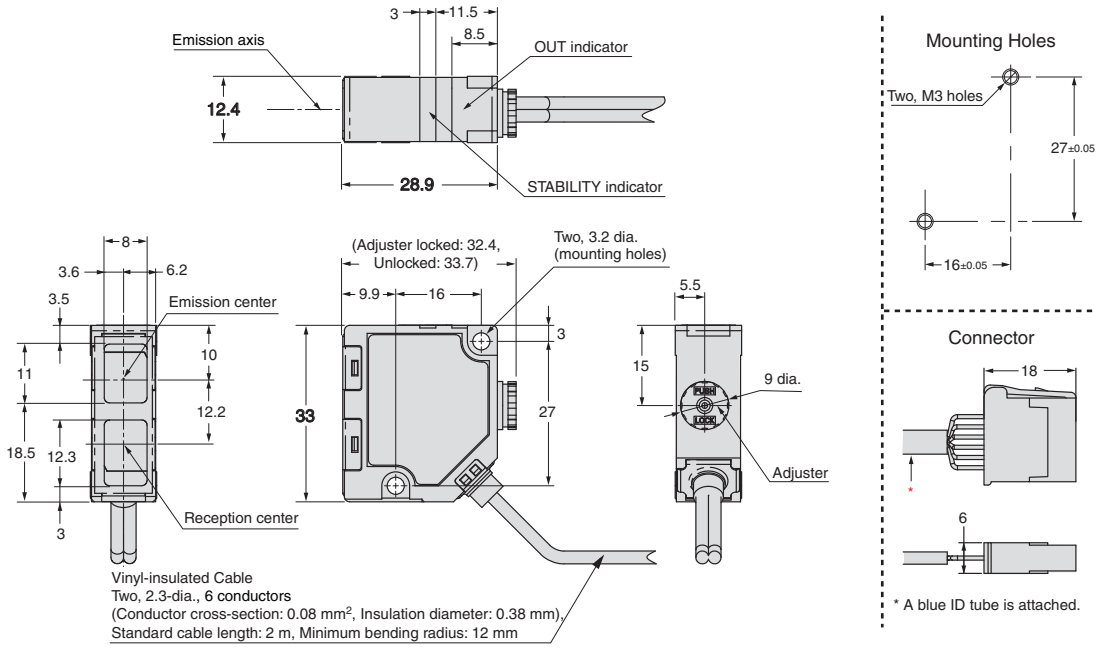

* A blue ID tube is attached.

Limited-reflective Model
E3NC-LH01

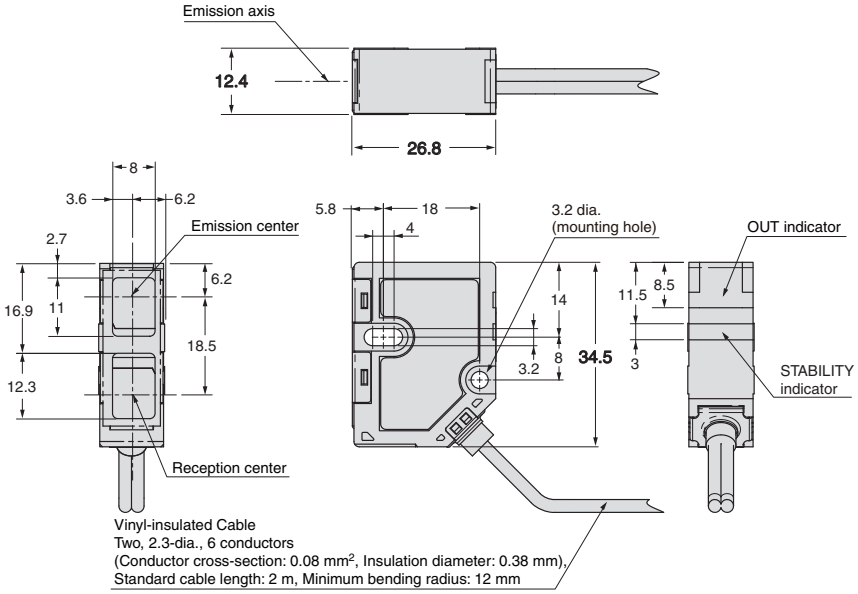

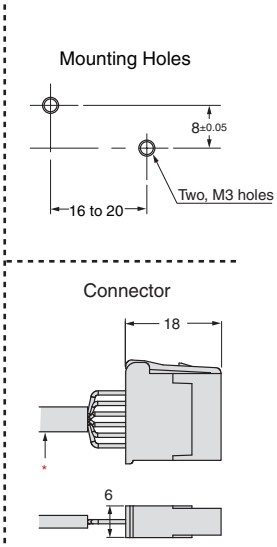

Distance-settable Models
E3NC-SH250H
E3NC-SH250
E3NC-SH100

*1 E3NC-SH100
L = 35 to 100 mm,
A = 15.92° to 5.67°

E3NC-SH250H/250
L = 35 to 250 mm,
A = 15.92° to 2.27°

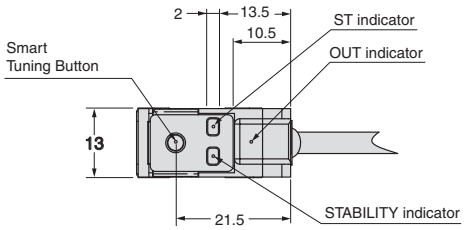

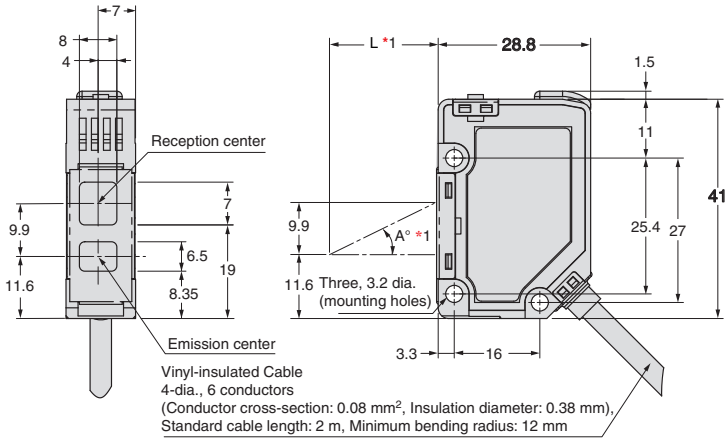

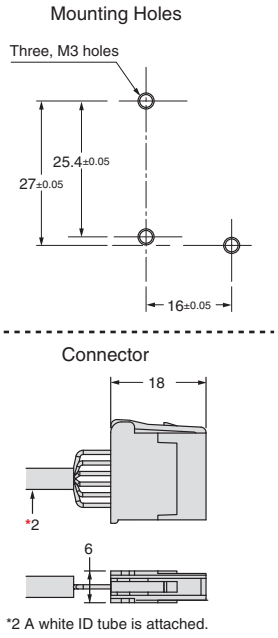

Amplifier Units

Pre-wired Amplifier Units

E3NC-LA21
E3NC-LA51
E3NC-SA21
E3NC-SA51

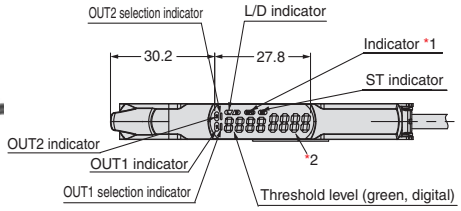

*1. The indicators are as follows:

E3NC-LA21 **E3NC-LA51**	DPC indicator
E3NC-SA21 **E3NC-SA51**	ZERO indicator

*2. The display is as follows:

E3NC-LA21 **E3NC-LA51**	Incident level (white, digital)
E3NC-SA21 **E3NC-SA51**	Measurement value (white, digital)

*3. Cable Specifications
Round vinyl-insulated cable, 4 dia., 5 conductors
(Conductor cross-section: 0.2 mm^2, Insulation diameter: 0.9 mm),
Standard cable length: 2 m, Minimum bending radius: 12 mm

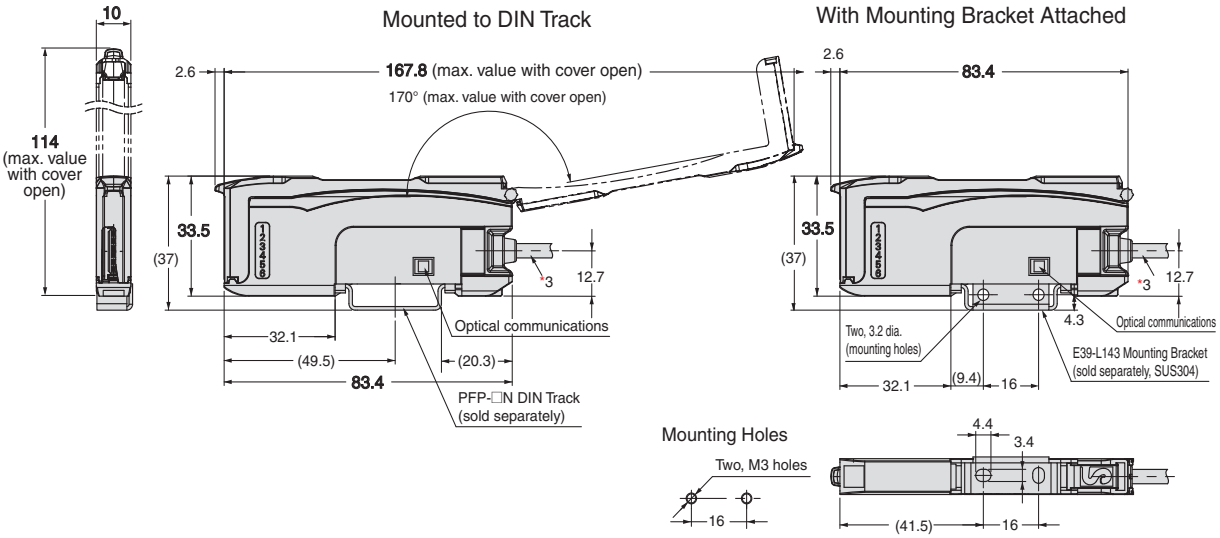

Amplifier Units with Wire-saving Connectors

E3NC-LA7
E3NC-LA9
E3NC-SA7
E3NC-SA9

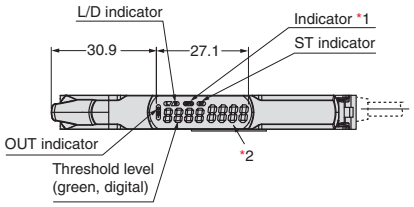

*1. The indicators are as follows:

E3NC-LA7 **E3NC-LA9**	DPC indicator
E3NC-SA7 **E3NC-SA9**	ZERO indicator

*2. The display is as follows:

E3NC-LA7 **E3NC-LA9**	Incident level (white, digital)
E3NC-SA7 **E3NC-SA9**	Measurement value (white, digital)

*3. Cable Specifications

Model	Outer diameter	No. of conductors
E3X-CN22	**4.0**	**2**
E3X-CN21		**4**

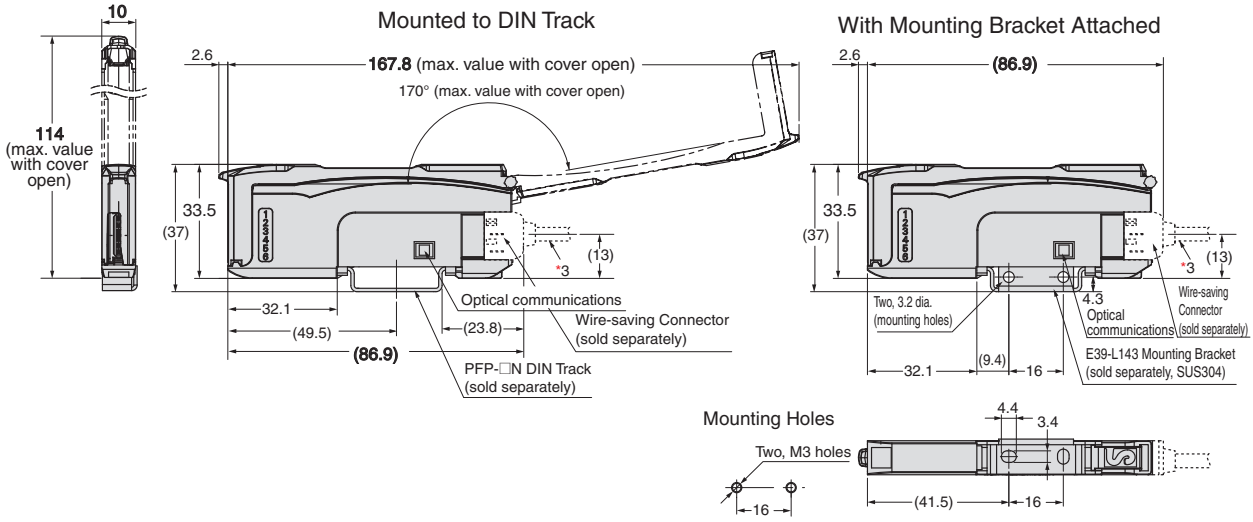

Amplifier Units with M8 Connectors

E3NC-LA24
E3NC-LA54
E3NC-SA24
E3NC-SA54

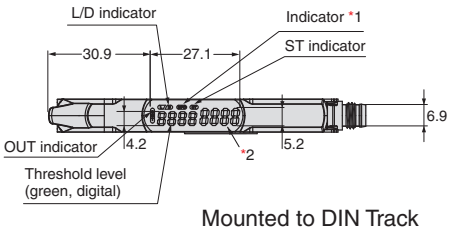

Connector pin arrangement

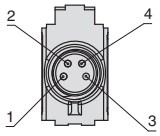

*1. The indicators are as follows:

E3NC-LA24 **E3NC-LA54**	DPC indicator
E3NC-SA24 **E3NC-SA54**	ZERO indicator

*2. The display is as follows:

E3NC-LA24 **E3NC-LA54**	Incident level (white, digital)
E3NC-SA24 **E3NC-SA54**	Measurement value (white, digital)

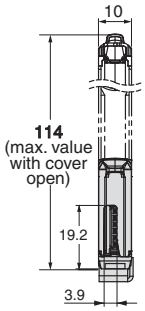

Mounted to DIN Track

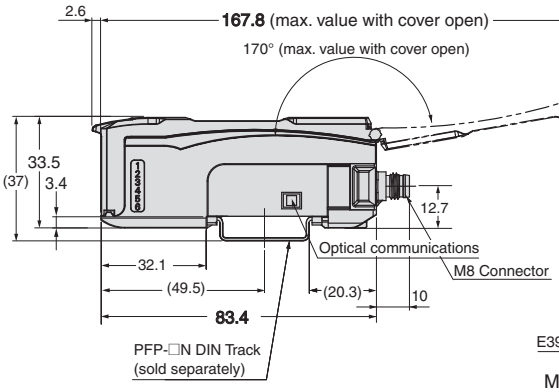

With Mounting Bracket Attached

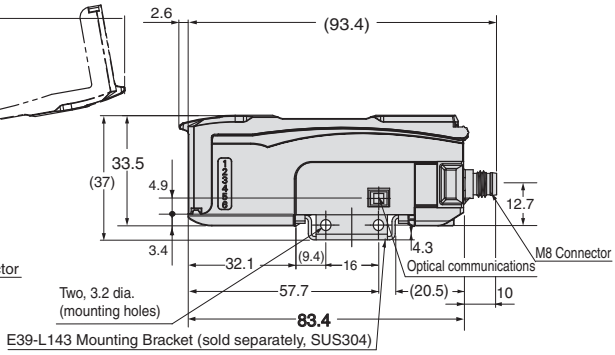

Mounting Holes

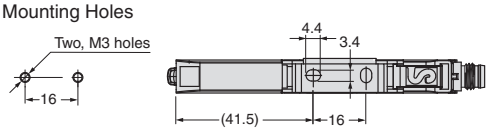

Amplifier Units with Connectors for Sensor Communications Unit

E3NC-LA0
E3NC-SA0

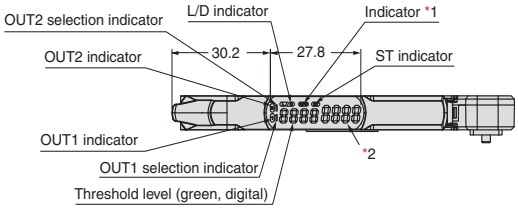

*1. The indicators are as follows:

E3NC-LA0	DPC indicator
E3NC-SA0	ZERO indicator

*2. The display is as follows:

E3NC-LA0	Incident level (white, digital)
E3NC-SA0	Measurement value (white, digital)

Mounted to DIN Track

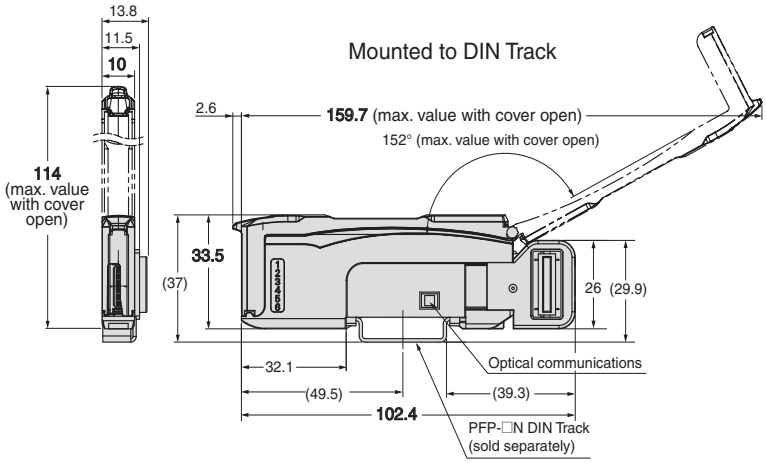

Accessories (Sold Separately)

Reflectors for Retro-reflective Sensors

E39-R21

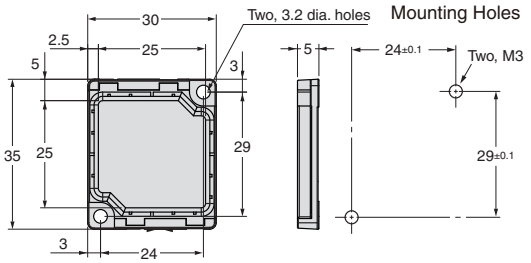

Materials Reflective surface: Methacrylic resin (PMMA)
Back surface: Polybutylene terephthalate (PBT)

E39-RS10

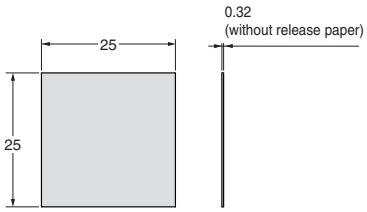

Materials Methacrylic resin (PMMA)

E39-R22

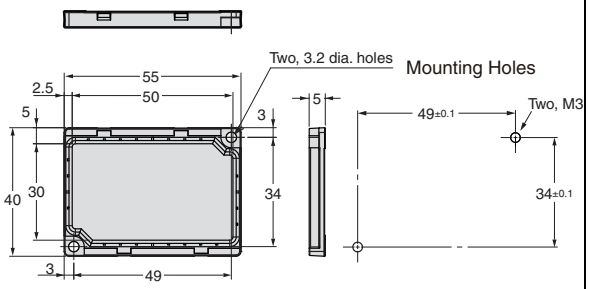

Materials Reflective surface: Methacrylic resin (PMMA)
Back surface: Polybutylene terephthalate (PBT)

E39-RS11

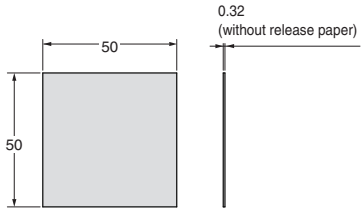

Materials Methacrylic resin (PMMA)

Lens Attachment

E39-P51

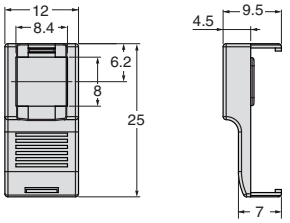

Materials Main body: ABS
Lens: Methacrylic resin (PMMA)

With E39-P51 Lens Attachment Attached

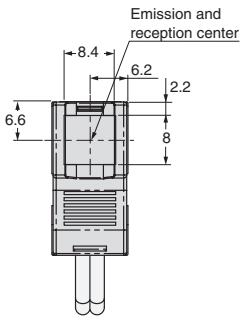

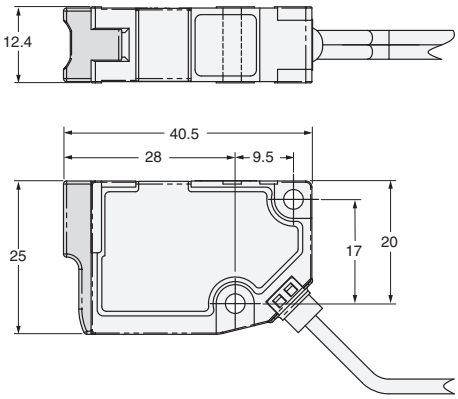

E39-P52

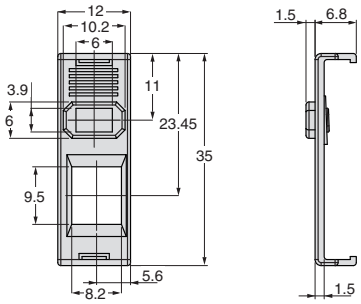

Materials Main body: ABS
Lens: Methacrylic resin (PMMA)

With E39-P52 Lens Attachment Attached

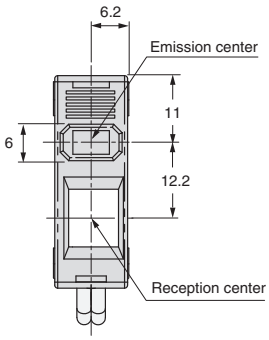

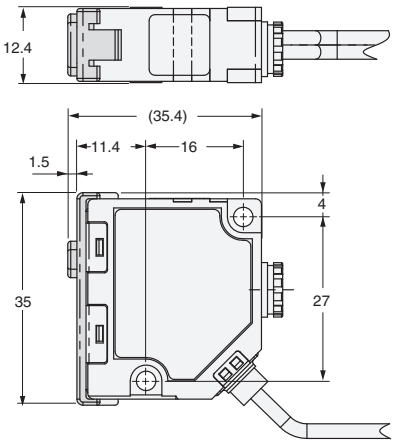

Sensor Head Mounting Brackets
E39-L190

Mounting Bracket

Materials: Stainless steel (SUS304)
Thickness: 1.2 mm
Accessories: Phillips screws (M3×18, P = 0.5, stainless steel): 2, Nut plate: 1

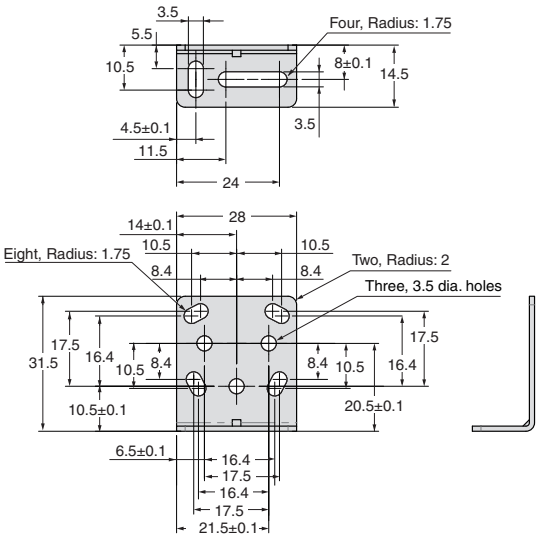

Nut Plate

Materials: Stainless steel (SUS304)
Thickness: 1.5 mm

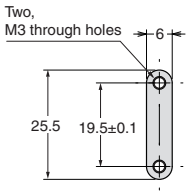

With E39-L190 Mounting Bracket Attached for Bottom Mounting

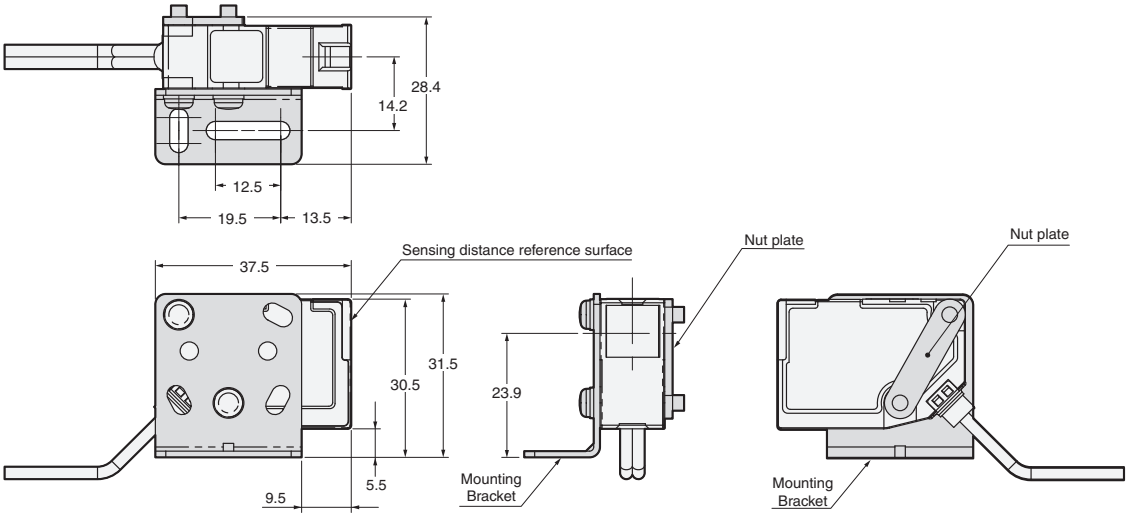

With E39-L190 Mounting Bracket Attached for Back Mounting

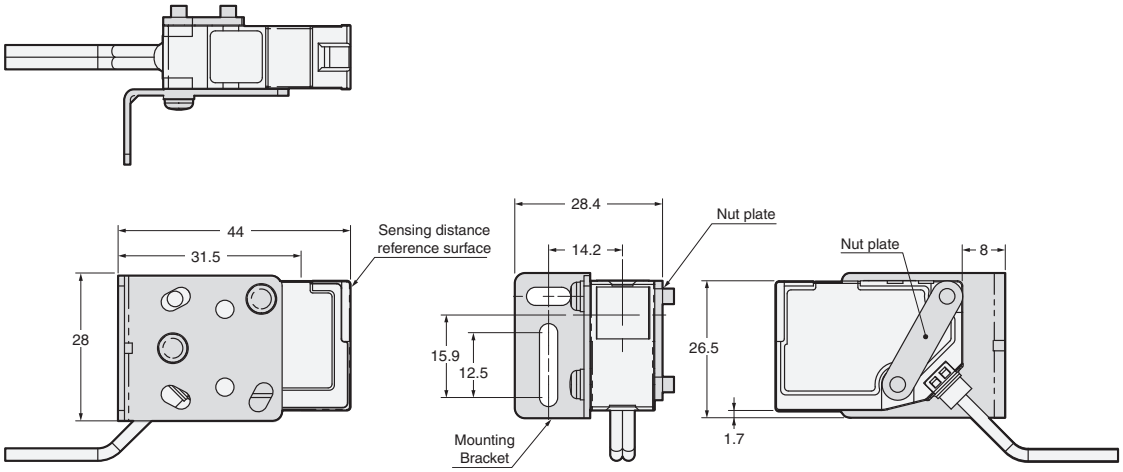

E39-L185

Mounting Bracket
Material: Stainless steel (SUS304)
Thickness: 1.2 mm
Accessories: Phillips screws (M3×18, P = 0.5, stainless steel): 2
Nut plate: 1

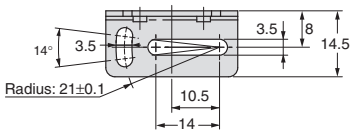

Nut Plate
Material: Stainless steel (SUS304)
Thickness: 1.5 mm

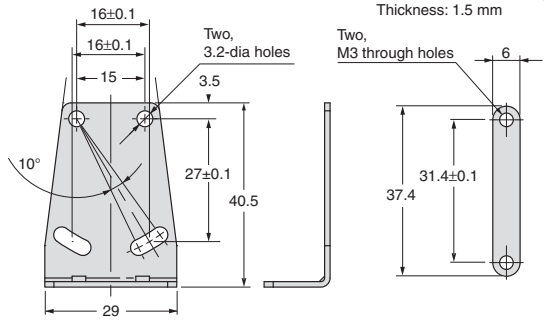

With E39-L185 Mounting Bracket Attached

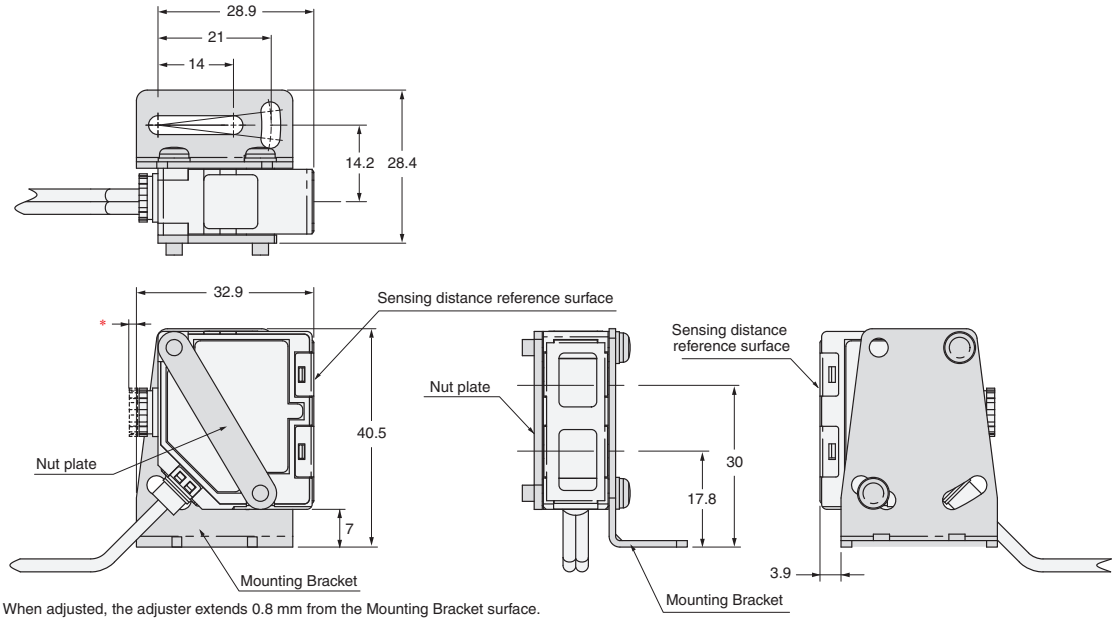

* When adjusted, the adjuster extends 0.8 mm from the Mounting Bracket surface.

E39-L186

Mounting Bracket
Material: Stainless steel (SUS304)
Thickness: 1.2 mm
Accessories: Phillips screws (M3×18, P = 0.5, stainless steel): 2
Nut plate: 1

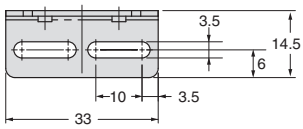

Nut Plate
Material: Stainless steel (SUS304)
Thickness: 1.5 mm

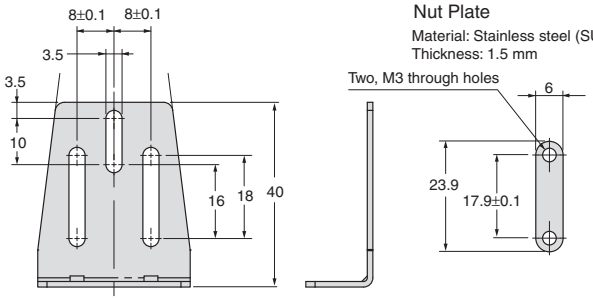

With E39-L186 Mounting Bracket Attached for Bottom Mounting

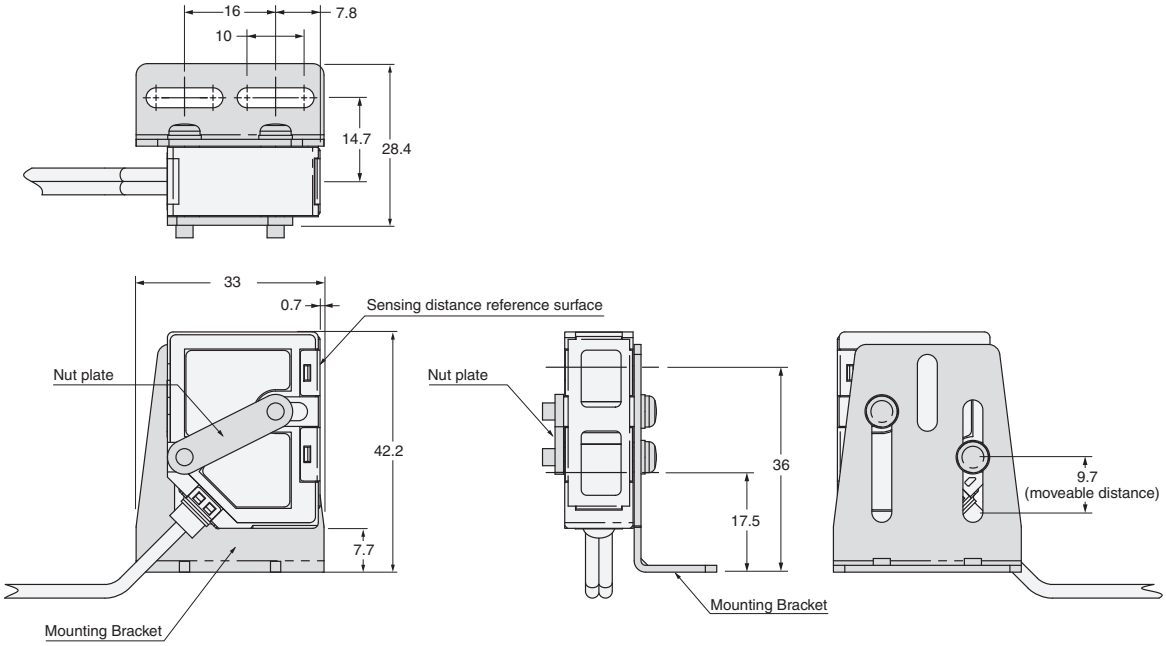

With E39-L186 Mounting Bracket Attached for Back Mounting

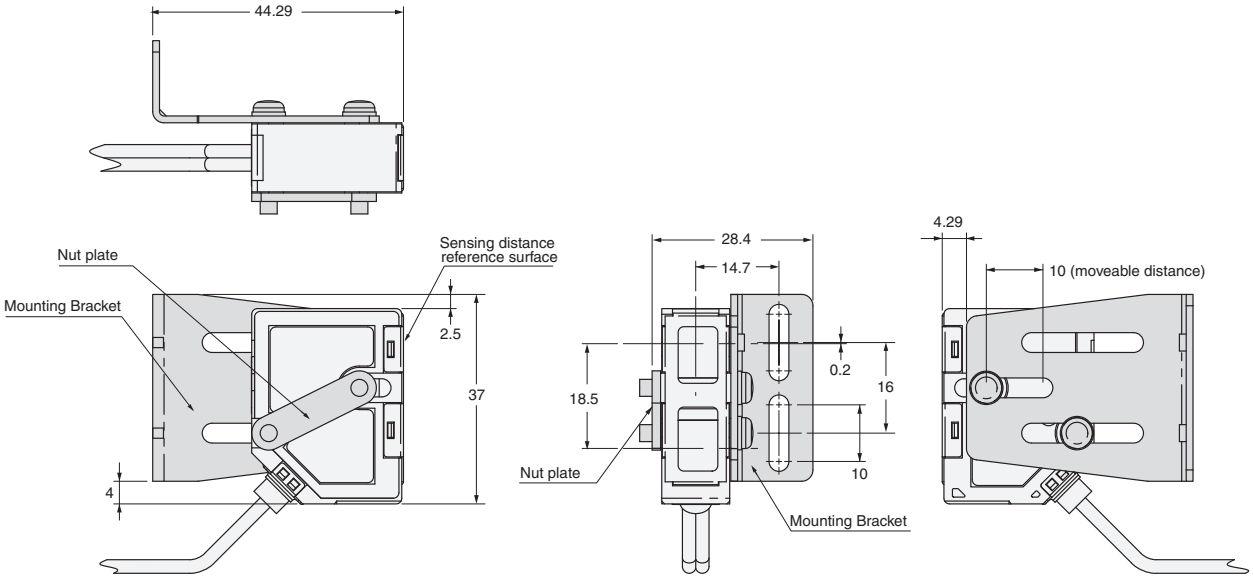

E39-L187

Mounting Bracket
Material: Stainless steel (SUS304)
Thickness: 1.2 mm
Accessories: Phillips screws (M3×18, P = 0.5, stainless steel): 2
Nut plate: 1

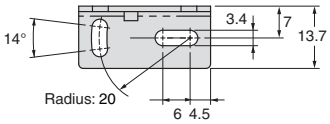

Nut Plate
Material: Stainless steel (SUS304)
Thickness: 1.5 mm

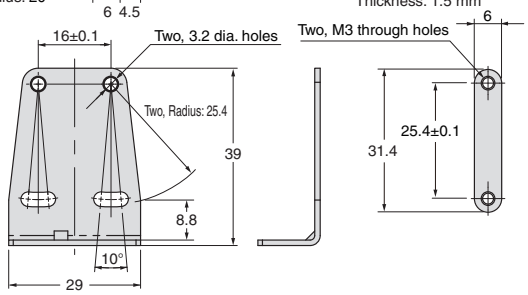

With E39-L187 Mounting Bracket Attached

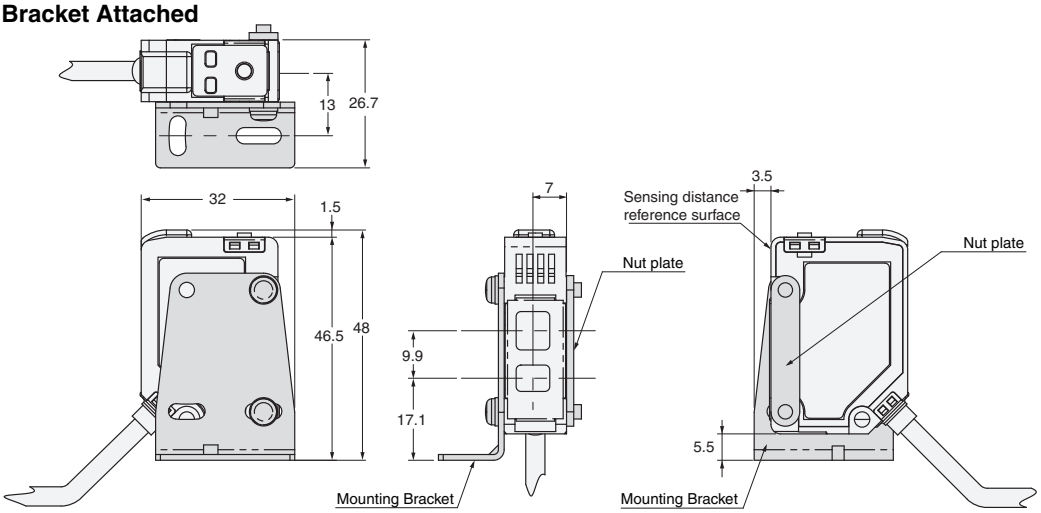

E39-L188

Mounting Bracket

Material: Stainless steel (SUS304)
Thickness: 1.2 mm
Accessories: Phillips screws (M3×18, P = 0.5, stainless steel): 2
Nut plate: 1

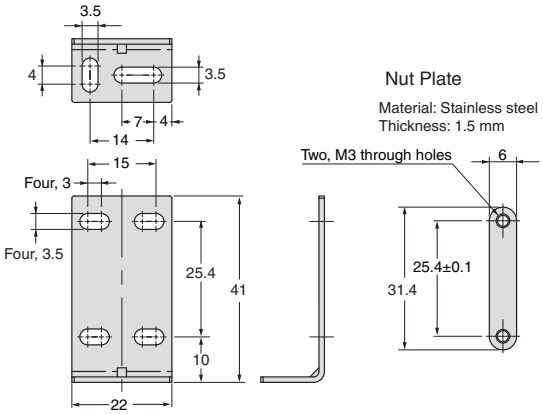

Nut Plate

Material: Stainless steel (SUS304)
Thickness: 1.5 mm

With E39-L188 Mounting Bracket Attached

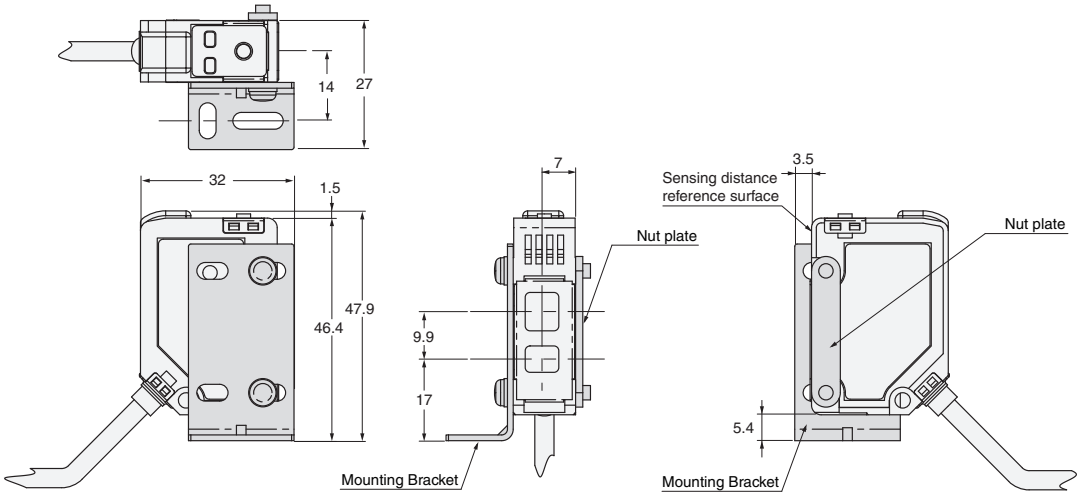

Wire-saving Connectors

Master Connector
E3X-CN21

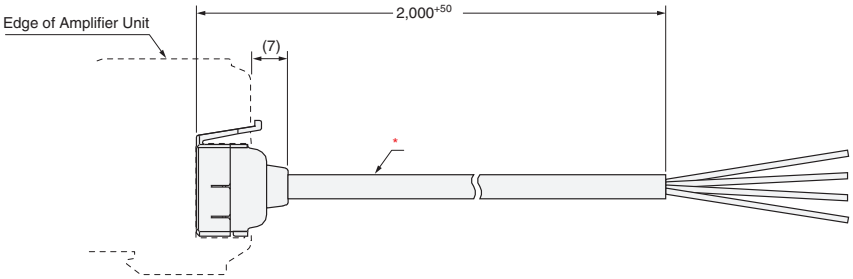

*4-dia. cable with 4 conductors, Standard cable length: 2 m (Conductor cross-section: 0.2 mm^2 (AWG24), Insulation diameter: 1.1 mm)

Slave Connector
E3X-CN22

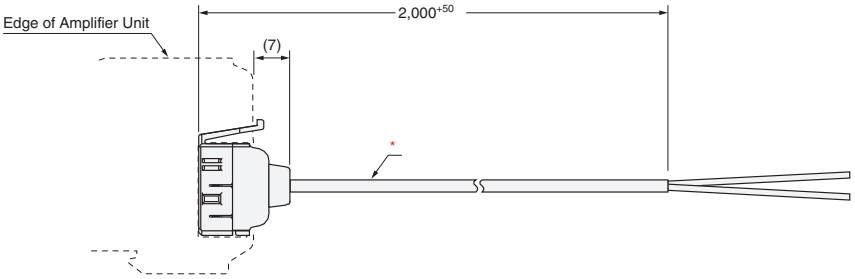

*4-dia. cable with 2 conductors, Standard cable length: 2 m (Conductor cross-section: 0.2 mm^2 (AWG24), Insulation diameter: 1.1 mm)

Sensor I/O Connectors

Straight
XS3F-M421-40□-A

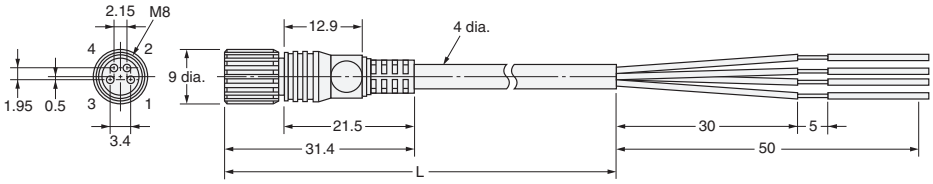

L-shaped
XS3F-M422-40□-A

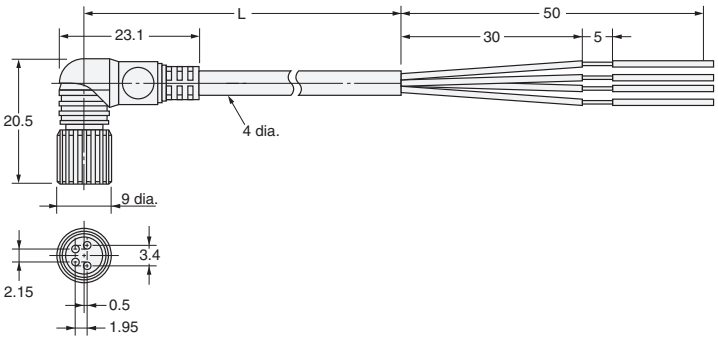

Amplifier Unit Mounting Bracket
E39-L143

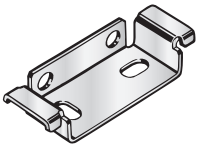

Material: Stainless steel (SUS304)

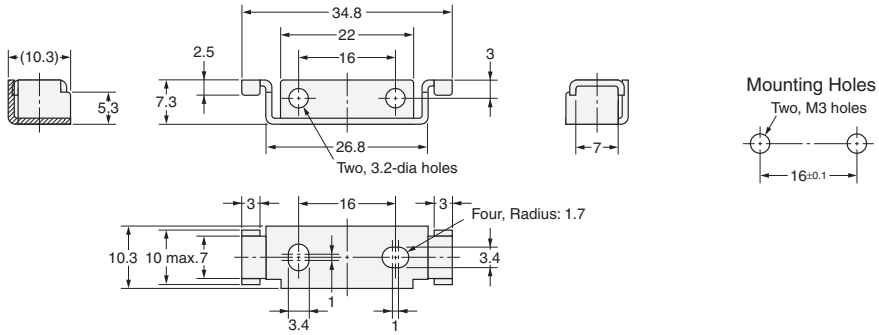

DIN Track
PFP-100N
PFP-50N

Material: Aluminum

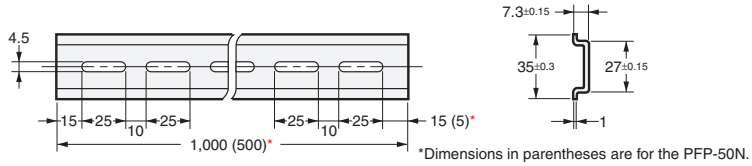

*Dimensions in parentheses are for the PFP-50N.

PFP-100N2

Material: Aluminum

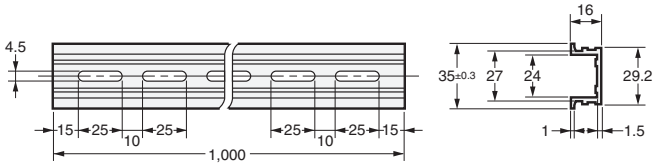

End Plate
PFP-M

Materials: Iron, zinc plating

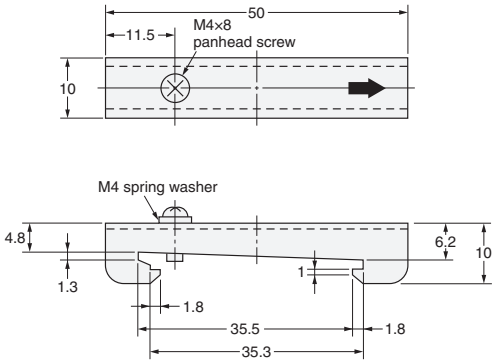

Terms and Conditions Agreement

Read and understand this catalog.
Please read and understand this catalog before purchasing the products. Please consult your OMRON representative if you have any questions or comments.

Warranties.
(a) Exclusive Warranty. Omron's exclusive warranty is that the Products will be free from defects in materials and workmanship for a period of twelve months from the date of sale by Omron (or such other period expressed in writing by Omron). Omron disclaims all other warranties, express or implied.
(b) Limitations. OMRON MAKES NO WARRANTY OR REPRESENTATION, EXPRESS OR IMPLIED, ABOUT NON-INFRINGEMENT, MERCHANTABILITY OR FITNESS FOR A PARTICULAR PURPOSE OF THE PRODUCTS. BUYER ACKNOWLEDGES THAT IT ALONE HAS DETERMINED THAT THE
PRODUCTS WILL SUITABLY MEET THE REQUIREMENTS OF THEIR INTENDED USE.
Omron further disclaims all warranties and responsibility of any type for claims or expenses based on infringement by the Products or otherwise of any intellectual property right. (c) Buyer Remedy. Omron's sole obligation hereunder shall be, at Omron's election, to (i) replace (in the form originally shipped with Buyer responsible for labor charges for removal or replacement thereof) the non-complying Product, (ii) repair the non-complying Product, or (iii) repay or credit Buyer an amount equal to the purchase price of the non-complying Product; provided that in no event shall Omron be responsible for warranty, repair, indemnity or any other claims or expenses regarding the Products unless Omron's analysis confirms that the Products were properly handled, stored, installed and maintained and not subject to contamination, abuse, misuse or inappropriate modification. Return of any Products by Buyer must be approved in writing by Omron before shipment. Omron Companies shall not be liable for the suitability or unsuitability or the results from the use of Products in combination with any electrical or electronic components, circuits, system assemblies or any other materials or substances or environments. Any advice, recommendations or information given orally or in writing, are not to be construed as an amendment or addition to the above warranty.
See http://www.omron.com/global/ or contact your Omron representative for published information.

Limitation on Liability; Etc.
OMRON COMPANIES SHALL NOT BE LIABLE FOR SPECIAL, INDIRECT, INCIDENTAL, OR CONSEQUENTIAL DAMAGES, LOSS OF PROFITS OR PRODUCTION OR COMMERCIAL LOSS IN ANY WAY CONNECTED WITH THE PRODUCTS, WHETHER SUCH CLAIM IS BASED IN CONTRACT, WARRANTY, NEGLIGENCE OR STRICT LIABILITY.
Further, in no event shall liability of Omron Companies exceed the individual price of the Product on which liability is asserted.

Suitability of Use.
Omron Companies shall not be responsible for conformity with any standards, codes or regulations which apply to the combination of the Product in the Buyer's application or use of the Product. At Buyer's request, Omron will provide applicable third party certification documents identifying ratings and limitations of use which apply to the Product. This information by itself is not sufficient for a complete determination of the suitability of the Product in combination with the end product, machine, system, or other application or use. Buyer shall be solely responsible for determining appropriateness of the particular Product with respect to Buyer's application, product or system. Buyer shall take application responsibility in all cases.
NEVER USE THE PRODUCT FOR AN APPLICATION INVOLVING SERIOUS RISK TO LIFE OR PROPERTY OR IN LARGE QUANTITIES WITHOUT ENSURING THAT THE SYSTEM AS A WHOLE HAS BEEN DESIGNED TO ADDRESS THE RISKS, AND THAT THE OMRON PRODUCT(S) IS PROPERLY RATED AND INSTALLED FOR THE INTENDED USE WITHIN THE OVERALL EQUIPMENT OR SYSTEM.

Programmable Products.
Omron Companies shall not be responsible for the user's programming of a programmable Product, or any consequence thereof.

Performance Data.
Data presented in Omron Company websites, catalogs and other materials is provided as a guide for the user in determining suitability and does not constitute a warranty. It may represent the result of Omron's test conditions, and the user must correlate it to actual application requirements. Actual performance is subject to the Omron's Warranty and Limitations of Liability.

Change in Specifications.
Product specifications and accessories may be changed at any time based on improvements and other reasons. It is our practice to change part numbers when published ratings or features are changed, or when significant construction changes are made. However, some specifications of the Product may be changed without any notice. When in doubt, special part numbers may be assigned to fix or establish key specifications for your application. Please consult with your Omron's representative at any time to confirm actual specifications of purchased Product.

Errors and Omissions.
Information presented by Omron Companies has been checked and is believed to be accurate; however, no responsibility is assumed for clerical, typographical or proofreading errors or omissions.

2014.7

In the interest of product improvement, specifications are subject to change without notice.

OMRON Corporation
Industrial Automation Company

http://www.ia.omron.com/